※ Dust Proof Construction
※ Bore Sizes ø20,25,32,40, 50mm
※ For applications where saving space is a necessity.
※ Each one of the two fingers, synchronized by a rack and pinion, rotates back perpendicular to the gripper.
※ Four Mounting Options

How to order

GRW-25-D 1 -RK -1

Type

Finger Option

— :Flat finger (Standard)

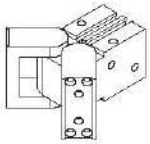

1:Right angle finger tap mounting

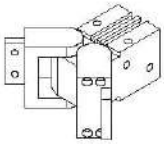

Number of auto switch

Auto switch type

RK	Reed switch
RKN	NPN
RKP	PNP

(Refer to P.77 for detailed auto switch specifications)

Specifications

Model		GRW-20	GRW-25	GRW-32	GRW-40	GRW-50
Cylinder bore(mm)		20	25	32	40	50
Fluid		Air				
Operating pressure(MPa)		0.15~0.7				
*Effective force (Nm) at the pressure of 0.5 MPa		0.30	0.73	1.61	3.70	8.27
Opening angle (Both sides)	Opening side	180°~182°				
	Closing side	-5°	-6°	-5°	-5°	-4°
Ambient and fluid temperature(°C)		-10~60				
Repeatability(mm)		± 0.2				
Max. operating frequency(c.p.m)		60		30		
Lubrication		No lubrication				
Action		Double acting				
Weight (g)		300	530	1000	2200	5150

* Refer to p.50 for details of effective holding force and allowable overhanging distance.

Effective holding force

Indication of effective holding force

1. Although the condition differs according to the coefficient of friction between the attachment and work, select a model that can produce a holding force of 10 to 20 times the work weight.
2. The holding force shown in the tables represents the holding force of one finger when all fingers and attachments are in contact with the work.
3. Further allowance should be provided when great acceleration or impact is expected during work transfer.

F:Thrust of one finger L:Holding point

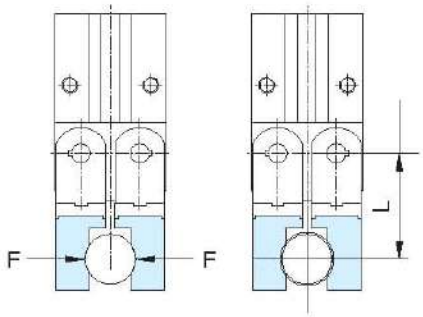

GRW-20D

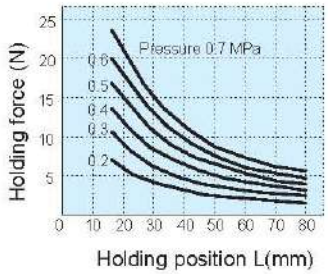

GRW-25D

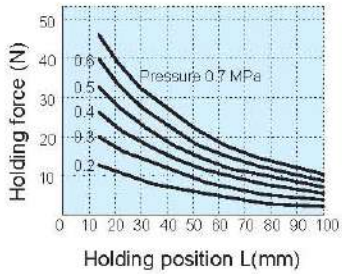

External hold

GRW-32D

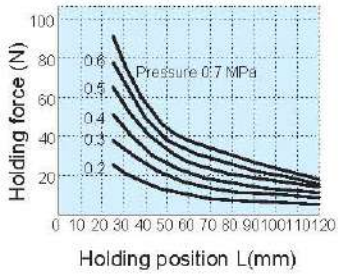

GRW-40D

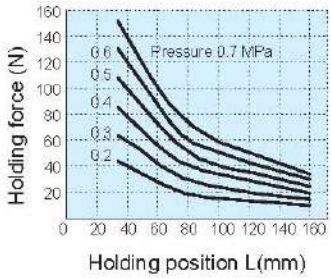

GRW-50D

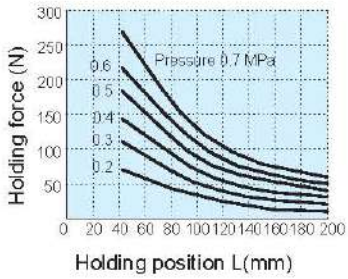

Confirmation of holding point

Work should be held at a point within the range of overhanging distance (H) for a given pressure indicated in the tables.
When the work is held at a point outside of the recommended range for a given pressure, it may causes adverse effect on the gripper life.

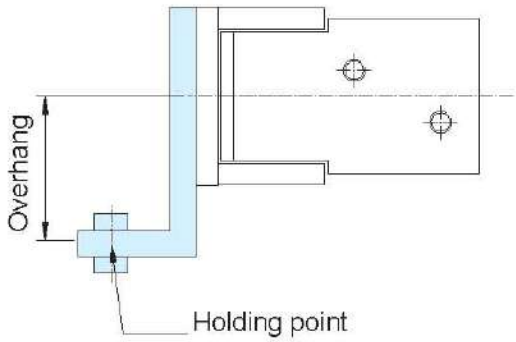

GRW

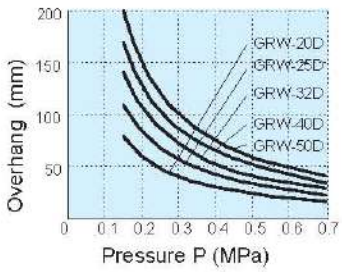

Dimensions

GRW-20~50D

Flat finger (standard)

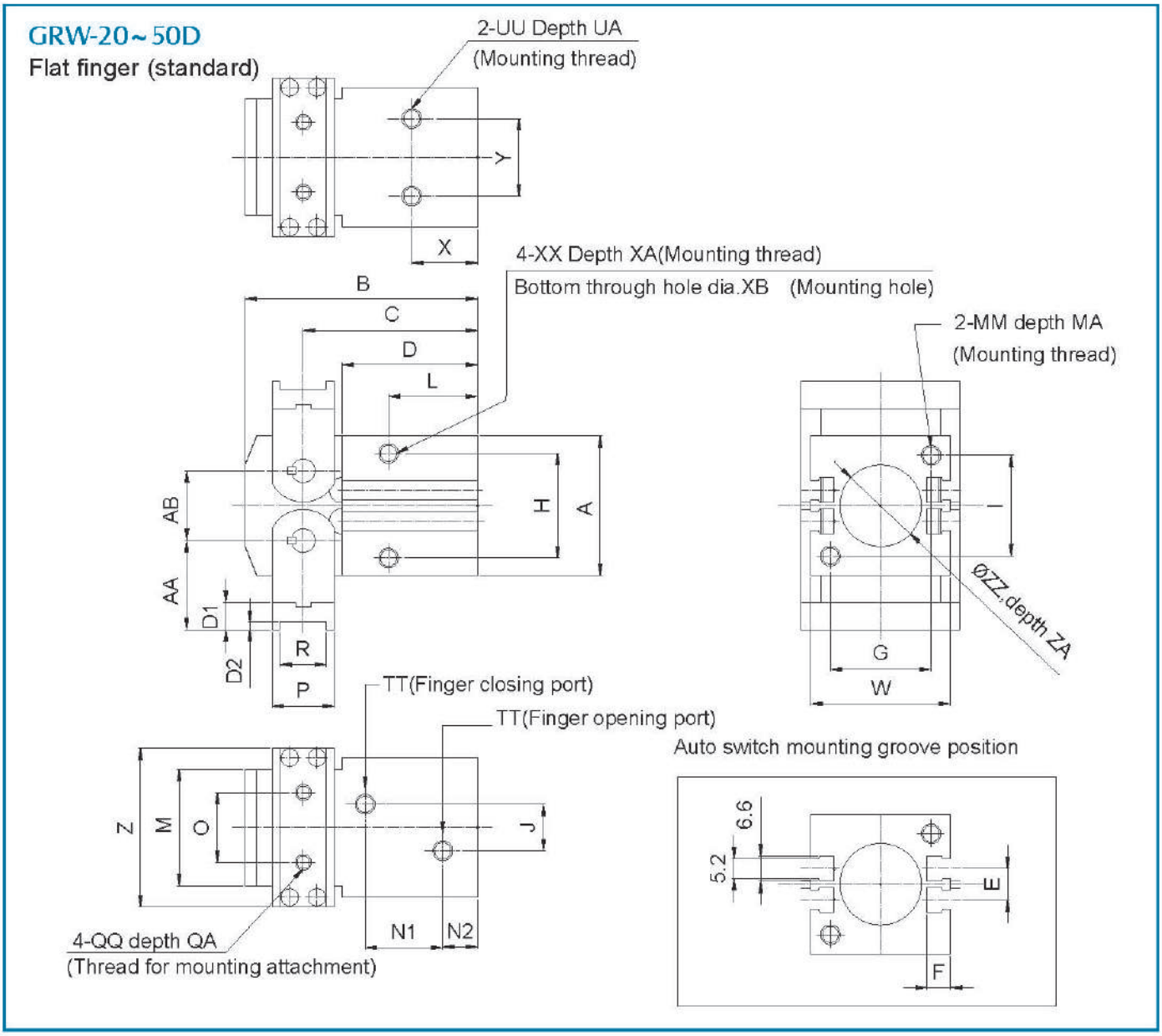

Model	A	AA	AB	B	C	D	D1	D2	E	F	G	H	I	J	L	M	MA	MM	N1	N2	O	P
GRW-20	36	23	18	60	45	35	7	2	8	6	26	27	26	12	23	30	10	M5x0.8	20	9	18	16
GRW-25	45	27	24	69	51	40	8	2	9	5.5	30	34	30	16	27	30.3	12	M6x1	23	10	20	21
GRW-32	58	32	30	83.5	61.5	47	9	2	22	5.5	30	42	45	20	29	32.9	12	M6x1	25	13	20	27
GRW-40	80	42	40	104.5	75.5	56.5	12	3	20	6	36	54	60	20	37.5	45	15	M8x1.25	33.5	14	28	36
GRW-50	112	58	56	136	96	69	17	4	26	6	40	70	80	30	48	58.6	20	M10x1.5	22	16	38	52

Model	R	QA	QQ	TT	UA	UU	W	X	XA	XB	XX	Y	Z	ZA	ZZ
GRW-20	$12^{+0.2}_{+0.1}$	5	M4x0.7	M5x0.8	7	M5x0.8	36	17	10	4.2	M5x0.8	20	41	3	$21H9^{+0.052}_{0}$
GRW-25	$17^{+0.2}_{+0.1}$	6	M5x0.8	M5x0.8	10	M6x1	40	20	12	5.1	M6x1	24	45	3	$26H9^{+0.052}_{0}$
GRW-32	$23^{+0.2}_{+0.1}$	7	M6x1	Rc 1/8	10	M6x1	45	21	12	5.1	M6x1	24	51	4	$34H9^{+0.062}_{0}$
GRW-40	$30^{+0.3}_{+0.1}$	9	M8x1.25	Rc 1/8	15	M8x1.25	56	27.5	16	6.8	M8x1.25	30	67	4	$42H9^{+0.062}_{0}$
GRW-50	$44^{+0.4}_{+0.1}$	13	M10x1.5	Rc 1/4	20	M10x1.5	66	36	20	8.5	M10x1.5	40	85	5	$52H9^{+0.074}_{0}$

Dimensions

GRW-20~50D1

Right angle finger

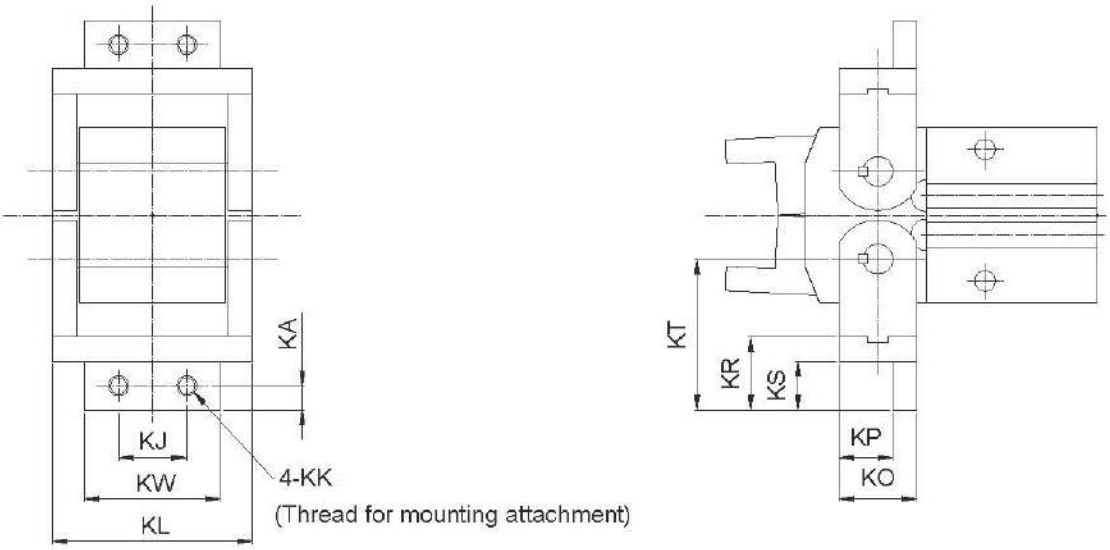

Model	KA	KJ	KK	KL	KO	KP	KR	KS	KT	KW
GRW-20D1	5	14	M4x0.7	41	16	11	15	10	31	28
GRW-25D1	6	16	M5x0.8	45	21	15	18	12	37	30
GRW-32D1	7	18	M6x1	51	27	20	21	14	44	34
GRW-40D1	10	24	M8x1.25	67	36	26	30	21	60	44
GRW-50D1	12	30	M10x1.5	85	52	39	37	24	78	58

Mounting of air gripper

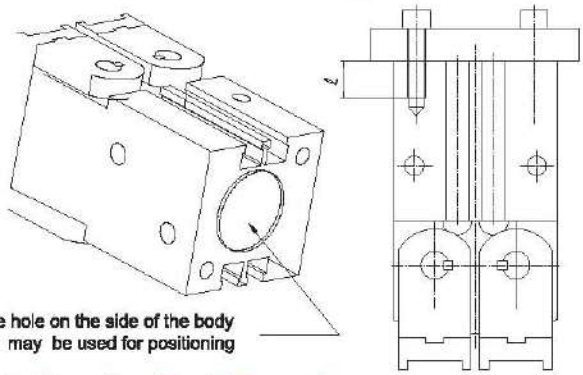

Axis Mounting (Body Tapped)

Model	Bolt	Maximum torque N.m	Max. screw depth ℓ (mm)
GRW-20D	M5x0.8	4.3	10
25D	M6x1	7.4	12
32D	M6x1	7.4	12
40D	M8x1.25	17.7	15
50D	M10x1.5	37.2	20

Model	Hole diameter (mm)		Height (mm)
GRW-20D	ø 21H9	$^{+0.052}_{0}$	3
25D	ø 26H9	$^{+0.052}_{0}$	3
32D	ø 34H9	$^{+0.062}_{0}$	4
40D	ø 42H9	$^{+0.062}_{0}$	4
50D	ø 52H9	$^{+0.074}_{0}$	5

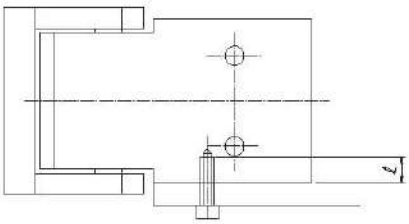

Lateral Mounting
(Body Tapped,Body throught Hole) Body tapped

Model	Bolt	Maximum torque N.m	Max. screw depth ℓ (mm)
GRW-20D	M5x0.8	4.3	10
25D	M6x1	7.4	12
32D	M6x1	7.4	12
40D	M8x1.25	17.7	15
50D	M10x1.5	37.2	20

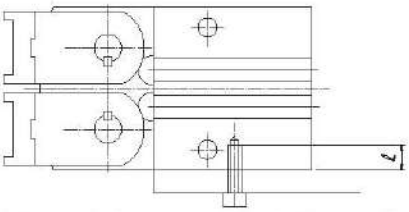

Vertical Mounting (Body Tapped)

Model	Bolt	Maximum torque N.m	Max. screw depth ℓ (mm)
GRW-20D	M5x0.8	2.9	7
25D	M6x1	5.9	10
32D	M6x1	5.9	10
40D	M8x1.25	17.7	15
50D	M10x1.5	37.2	20

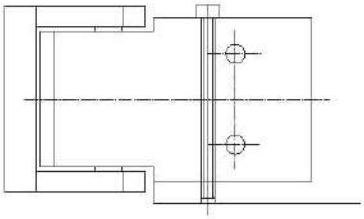

Body through hole

Model	Bolt	Maximum torque N.m
GRW-20D	M4x0.7	2.1
-25D	M5x0.8	4.3
-32D	M5x0.8	4.3
-40D	M6x1	7.4
-50D	M8x1.25	17.7

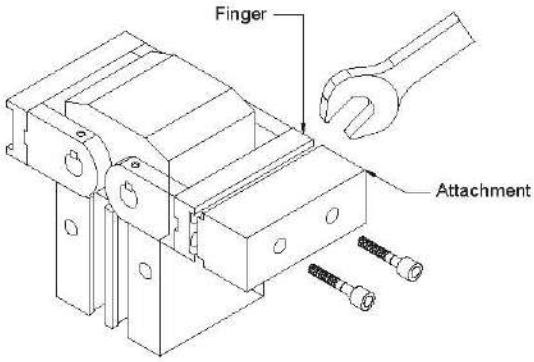

How to Mount Attachment on fingers

To mount an attachment to a finger, make sure to use a wrench to support the attachment so as not to apply undue strain on the finger.
Refer to the table below for the proper tightening torque on the bolt used for securing the attachment to the finger.

Model	Bolt	Maximum torque N.m
GRW-20D	M4x0.7	1.4
25D	M5x0.8	2.5
32D	M6x1	4.1
40D	M8x1.25	10.6
50D	M10x1.5	24.5

Warning
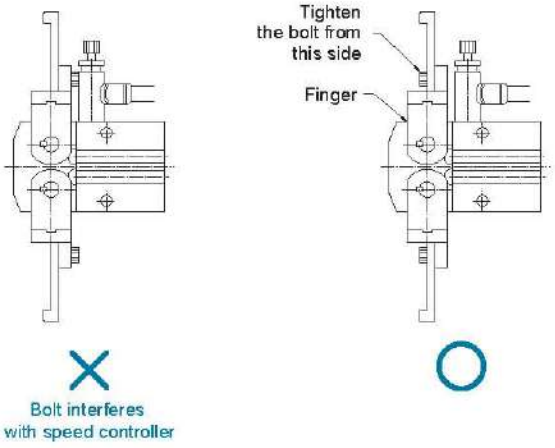
When using right angle finger tap mounting type, pay attention the interference of bolt and speed controller.