The gripper is needless pneumatic and electrical actuation.

Applies to the grippers where air piping cannot be used and is heat-resistant.

How to order

CG2 - 40 - OS

Cylinder bore
40

Gripper opening is via external force, cam drive, etc.

Grips the outer diameter by spring force.

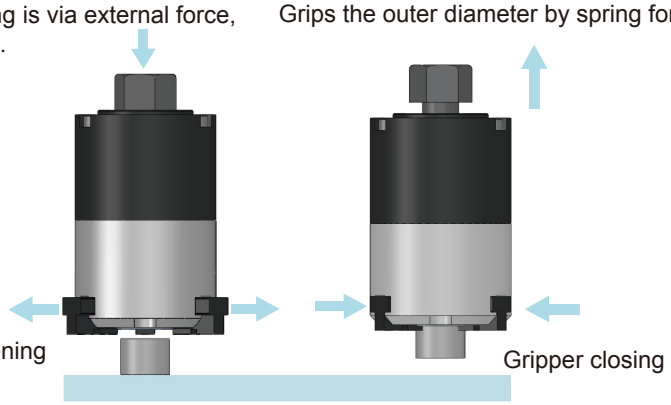

Dimension

Model	CG2-40-OS
Stroke mm (dia.) Opening / Closing	8
Cylinder bore (mm)	40
Ambient and fluid temperature˚C(˚F)	-5 (41˚F) to 60 (140˚F)
Repeatability(mm)	±0.01
External gripping force(N)	710~1050
Internal gripping force(N)	83~150
Weight(g)	1350
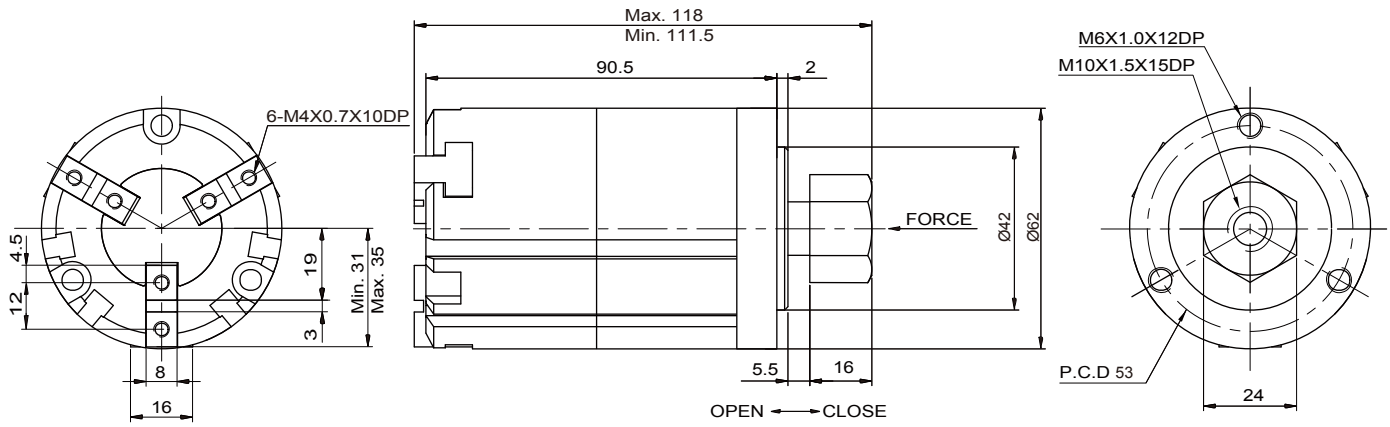
CG2- 40 - OS