Dual rods of high rigidity

High carbon chromium bearing steel.
Hard chrome plating.
Resistance to lateral, eccentric, impact load.

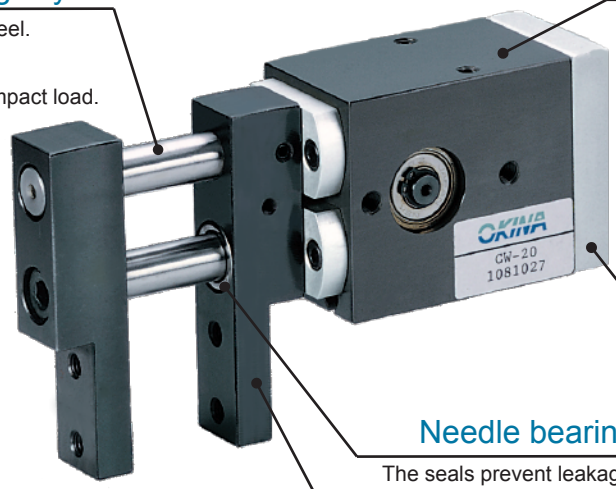

Easy mounting

3 types of mounting are possible.
Lightweight, space-saving.

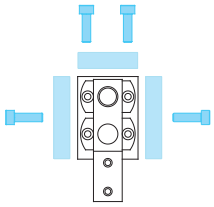

Axial piping

Auto switch and speed controller,
can be aligned in the same direction.

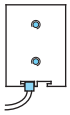

Needle bearing integrated oil seals

The seals prevent leakage of lubricant and entry of dust.
High precision and smooth operation.

Fingers are separated from gripper housing

Non-rotating of fingers.
Even in extremely dusty environments, it gets rid of weld spatter,
cutting chips into the gripper housing.

How to order

CW-20 — Type

-PS — Auto switch Type PS

In-line	Style
PS	Reed switch
PSN	NPN
PSP	PNP

1 — Number of auto switch

Model	CW-20	CW-32
Bore	20	32
Action	Double acting	
Fluid	Air 3-7kgf/cm^2	
Stroke (mm)	30	40
Proof pressure	10kgf/cm^2	
Operating temperature	-10°C~+60°C	
Weight (kg)	1.12	2.3
Lubrication	Non-lube	

* Maintenance:Re-Lubrication after appr. 1.5 million cycles recommended

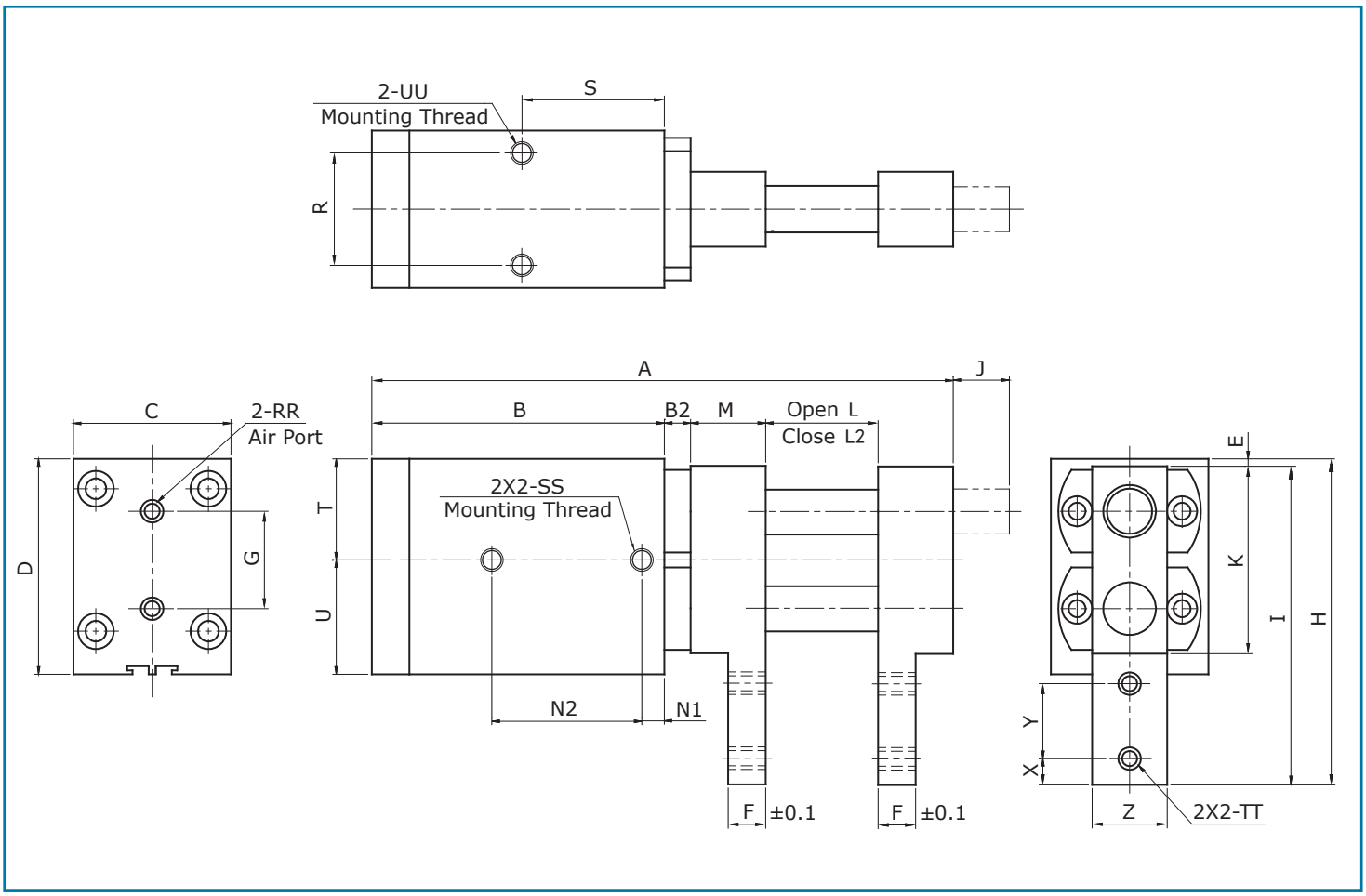

Model	A	B	B2	C	D	E	F	G	H	I	J	K	L	L2	M	N1
CW-20	155	78	7	42	57.5	2	10	26	87	85	15	50	30	0	20	6
CW-32	187	98	9	56	83	5	10	38	110	105	20	68	40	0	20	6

Model	N2	R	RR	S	SS	TT	T	U	UU	X	Y	Z
CW-20	40	30	M5X0.8	38	M6X1.0DP15	M6X1.0	27	30	M6X1.0DP15	7	20	20
CW-32	50	42	RC 1/8	51	M5X1.25DP15	M6X1.0	39	44	M8X1.25DP15	7	20	25

Gripping force diagrams ●This mark (●) symbol: Be recommended gripping force range

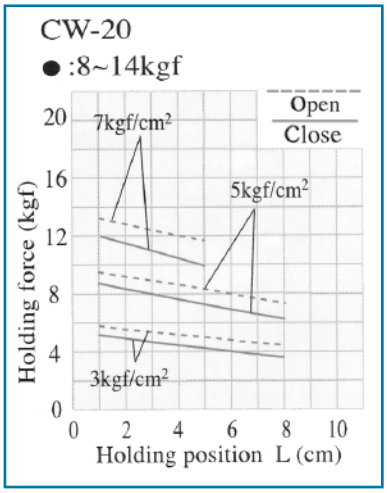

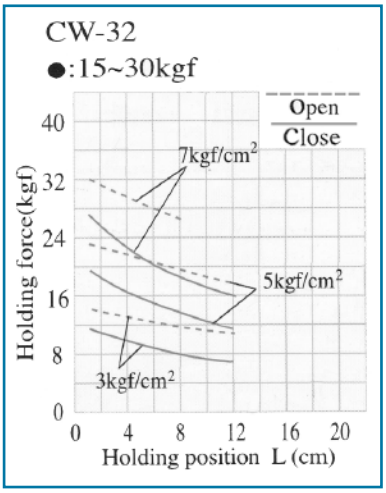

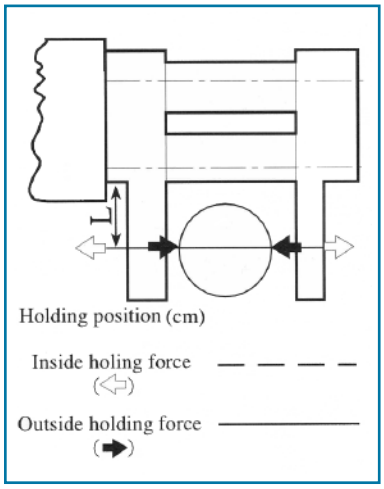

* With refernece to the hold force,under the condition must be considered.
* Condition:Friction coefficient,great acceleration impact is expected during work pice rotate.
* It recommend:Select a type of arithmetic holding force that can produce 10 to 20 time for work pice weight.

Applicable Type：CH、CP、CW

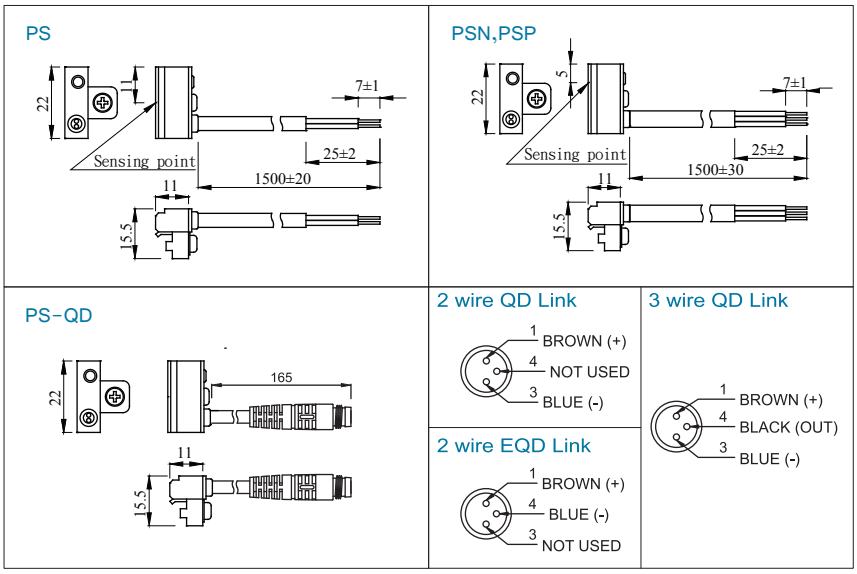

Specifications

	PS	PSN	PSP
SWITCHING LOGIC	SPST Normally Open	Solid State Output, Normally Open	
SENSOR TYPE	Reed Switch	NPN Current Sinking	PNP Current Sourcing
OPERATING VOLTAGE	5~240V DC/AC	5~28V DC	
SWITCHING CURRENT	100 mA max	200 mA max	
SWITCHING RATING	10 W max	6 W max	
CURRENT CONSUMPTION	-	20mA @24V max(Switch Active)	
VOLTAGE DROP	2.5 V max.@100mADC	0.5V @200mA max	
LEAKAGE CURRENT	-	0.01mA max	
INDICATOR	Red LED	Red LED	Green LED
CABLE	3.3ø,2C ,PVC	3.3ø,3C,PVC	
SENSITIVITY (NOTE 1.)	60 Gauss	40 Gauss	
TEMPERATURE RANGE	-10～70˚C		
SHOCK (NOTE 2.)	30G	50G	
VIBRATION (NOTE 3.)	9G		
ENCLOSURE CLASSIFICATION	IP 67 (NEMA 6)		
PROTECTION CIRCUT	None	Power Source Reverse Polarity；Surge Suppression	

Note 1. Measuring Standard Target : ø14.5*ø8*5t (Anisotropy Rubber Magnet)
Note 2. Sin Wave / X、Y、Z 3 Directions / 3 Times Each Direction / 11mS Each Time
Note 3. Double Amplitude 1.5 mm / 10Hz~55Hz~10Hz (Sweep 1min) / X、Y、Z 3 Directions /1Hour Each Time

Connect Diagram

PS

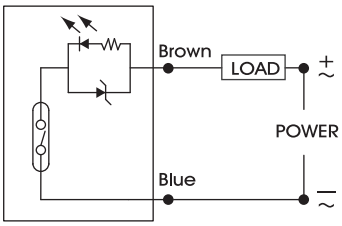

PSN

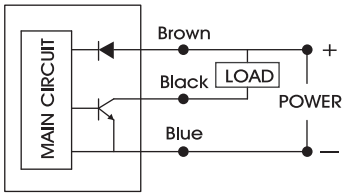
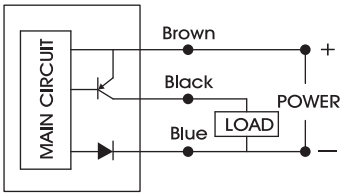
PSP