※ **4 to 10 times more allowable kinetic energy**
(ompared with internal shock absorber type)

※ **Otal length shortened**
Longitudinal mounting space is reduced because there is no protrusion from adjustment bolts or internal shock absorbers.

How to order

MRBS -10 -1 -RT -1

- MRBS: Type
- -10: Bore size

10
30
50

- -1: Connecting port position and rotation
- -RT: Auto switch type

Perpendicular	In-line	Style
RTV	RT	Reed switch
RTNV	RTN	NPN
RTPV	RTP	PNP

(Refer to P.79 for detailed auto switch specifications)

- -1: Number of auto switch

1	Standard type	180°
2		90°
3	Symmetric type	180°
4		90°

Refer to the table to the right

Connecting port position	Rotation 180°	Rotation 90°
Standard type	1:Standard type,180°	2:Standard type,90°
Symmetric type	3:Symmetric type,180°	4:Symmetric type,90°

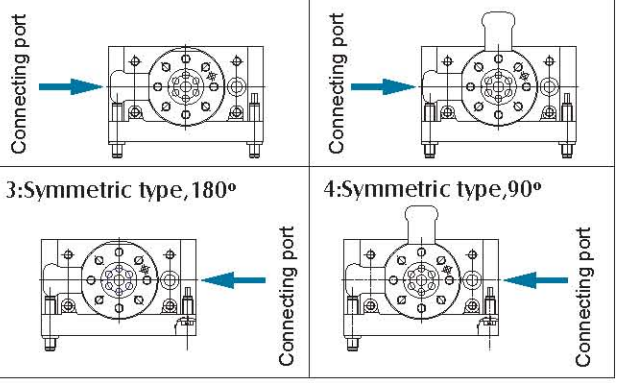

Specifications

Model		MRBS-10	MRBS-30	MRBS-50
Cylinder bore(mm)		15	20	25
Fluid		Air (Non-lube)		
Max. operating pressure (MPa)		1		
Min. operating pressure (MPa)		0.2		
Ambient and fluid temperature (°C)		0°~60° (No freezing)		
Allowable surge pressure (MPa)		–	1.5	
Cushion		Shock absorber		
Shock absorber type		PN0806	PN1008	PN1415
Rotation		90°, 180°		
Angle adjustment range		Each rotation end ± 3°		
Port size	End port	M5x0.8	Rc 1/8	
	Side port	M5x0.8		

* Note) The maximum operating pressure of the actuator is restricted by the maximum allowable thrust of the shock absorber.

Weights

(g)

Model		MRBS-10	MRBS-30	MRBS-50
Basic type	90° specification	670	1550	2520
	180° specification	640	1480	2410

Allowable kinetic energy and rotation time adjustment range

Model	MRBS-10	MRBS-30	MRBS-50
Allowable kinetic energy (J)	0.231	1.21	1.82
Rotation time adjustment range for stable operation (s/90°)	0.2 to 1.0		

* Note)Note) Values above indicate the time between the start of rotation and the deceleration caused by the shock absorber.
The time required for the rotary table to reach the rotation end after deceleration differs depending on the operating conditions (inertial moment of the load, rotation speed, and operating pressure), however, approximately 0.2 to 2 seconds are required.
Furthermore, the range of angles within which the shock absorber operates is between the rotation end and the values shown below.

Model	range of angle
MRBS-10	8.5°
MRBS-30	7.5°
MRBS-50	10.5°

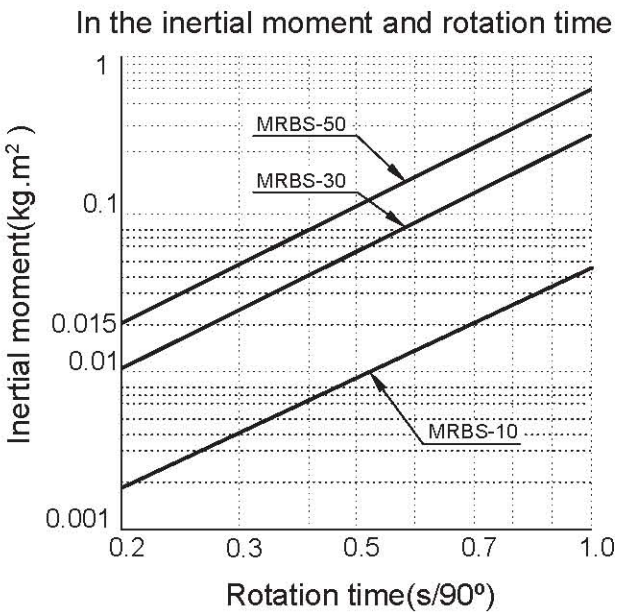

External Shock Absorber

The threaded orifices shown below are not connecting ports.
Never remove the plugs as this will cause malfunction.

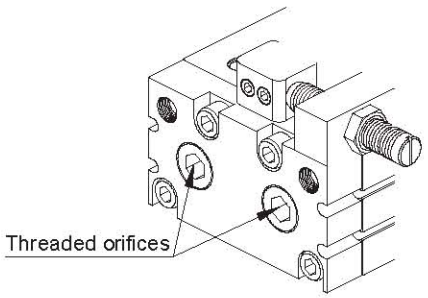

Shock Absorber

Never rotate the bottom screw of the shock absorber.(It is not an adjustment screw.) This may cause oil leakage.

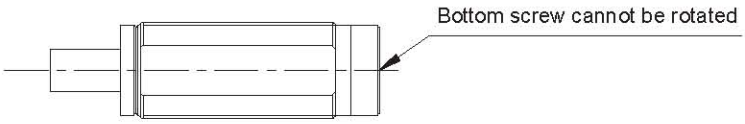

Rotating Direction and Rotation

1. The rotary table turns in the clockwise direction where the A port is pressurized, and in the counter-clockwise direction when the B port is pressurized.
2. By adjusting the shock absorber, the rotation end can be set within the ranges shown in the drawing.

Standard Type

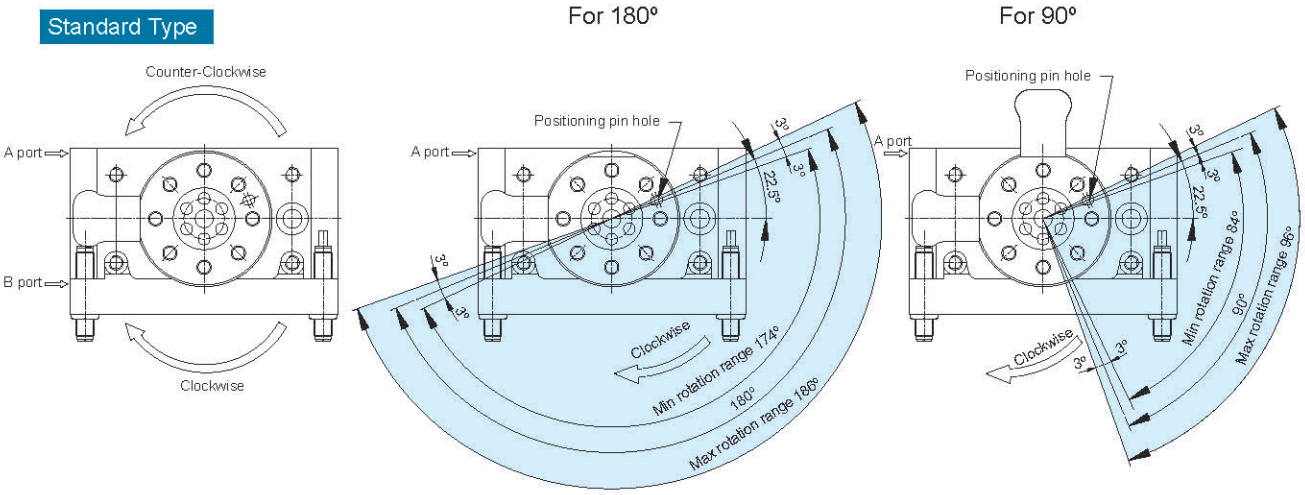

Symmetric Type

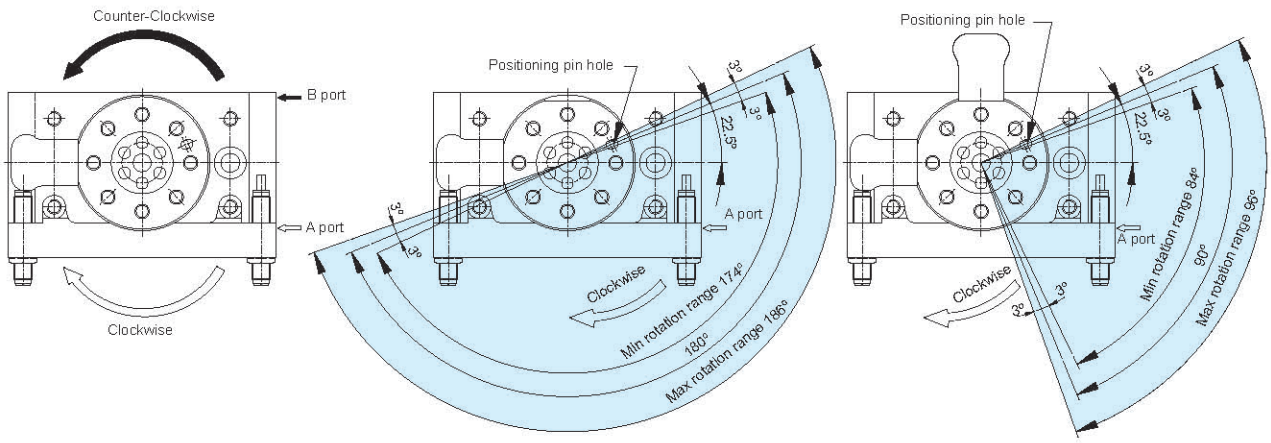

Note) The drawings show the rotation range for the top positioning pin hole of the table.
The pin hole position in the drawing shows the counter-clockwise rotation end when the shock absorbers are tightened equally and the rotation is adjusted to 180º and 90º

With external shock absorber

Size	Adjustment angle per rotation of angle adjustment screw
10	1.4º
30	1.1º
50	1.3º

Dimensions

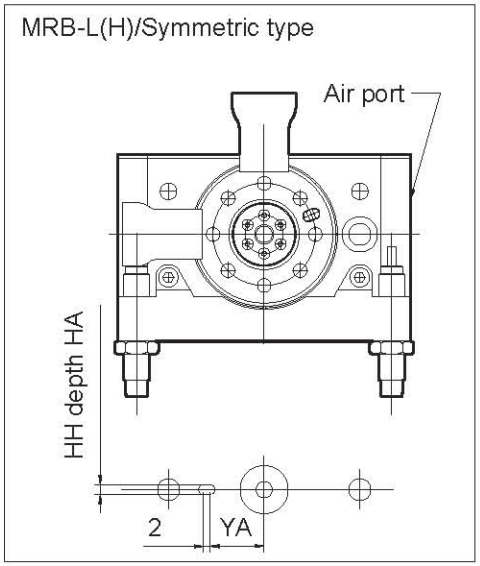

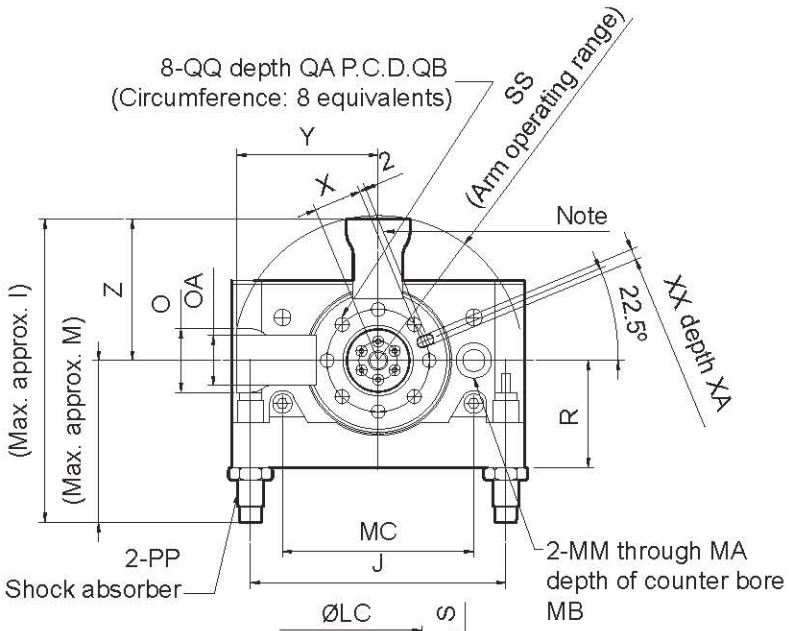

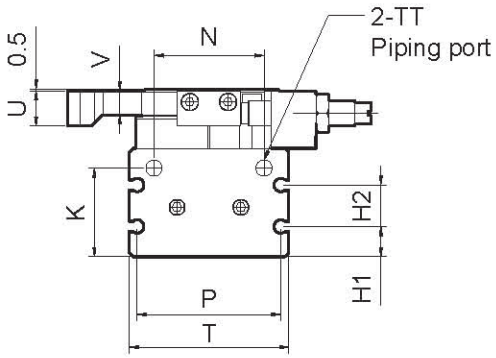

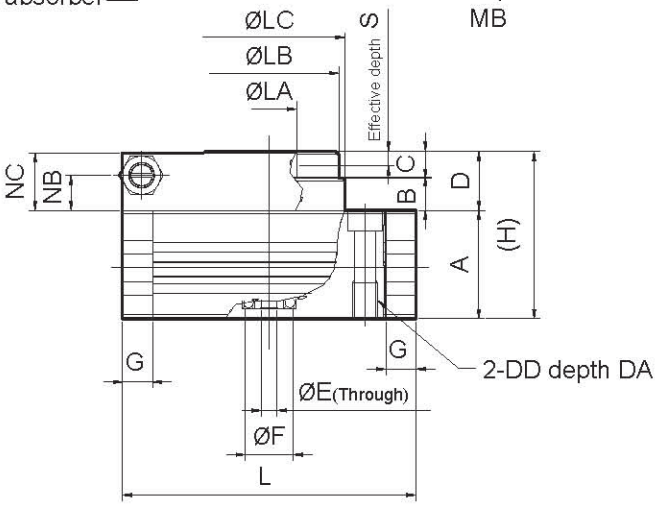

Note) This part is not available with 180° specification

(mm)

Model	A	B	C	D	DA	DD	E	F	G	H	H1	H2	HA	HH	I	J	K	L	LA	LB	LC
MRBS-10	34	4.5	8	13	12	M8x1.25	5	15H9	9.5	47	9	13	3H9	3.5	97.2	80	27.8	92	20H9	45	46
MRBS-30	40	6.5	10	17	15	M10x1.5	9	22H9	12	57	11.5	14	4H9	4.5	123.4	110	32	127	32H9	65	67
MRBS-50	46	7.5	12	20	18	M12x1.75	10	26H9	15.5	66	14.5	15	5H9	5.5	158.1	130	37.5	152	35H9	75	77

(mm)

Model	M	MA	MB	MC	MM	N	NB	NC	O	OA	P	PP	QA	QB	QQ	R	S	SS	T	TT
MRBS-10	52.9	11	6.5	60	6.8	34.5	5.5	12.5	20	15.6	45	PN-0806	8	32	M5x0.8	33.5	4	45.2	50	M5x0.8
MRBS-30	63.1	14	8.5	84	8.6	50	8	16.5	27	21.5	65	PN-1007	10	48	M6x1	46	4.5	61.5	70	Rc 1/8
MRBS-50	86.7	18	10.5	100	10.5	63	8.5	19.5	32	28	75	PN-1412	12	55	M8x1.25	56	5	72.9	80	Rc 1/8

(mm)

Model	U	V	X	XA	XX	Y	YA	Z
MRBS-10	11	7.5	15	3.5	3H9	44.3	19	44.3
MRBS-30	14	9.5	23	4.5	4H9	60.3	28	60.3
MRBS-50	18	11.5	26.5	5.5	5H9	71.4	33	71.4