※ Fluid can be used Air or Low Pressure Hydraulic.
※ Compact and light weight
※ Full Model with cushion
※ 90°, 180°rotation.
※ High torque and Low friction resistance.

How to order

MRA W H 50 -90 -RK -1

- MRA: Type
- W: Shatf style
- H: Style
- 50: Bore size
- -90: Rotation angle
- -RK: Auto swith type
- -1: Number of auto swith

Shatf style

Standard	—	Single shaft
Option	W	Double shaft
	X	Single shaft with four chamfers

Bore size

50
63
80
100

Style

-	Pneumatic
H	Air-hydro

Rotation angle

standard	90°
	180°

Auto swith type

RK	Reed swith
RKN	NPN
RKP	PNP

(Refer to P.77 for detailed auto switch specfications)

Specifications

Style		Pneumatic				Air-hydro		
Model		MRA-50	MRA-63	MRA-80	MRA-100	MRA-63	MRA-80	MRA-100
Cylinder bore(mm)		50	63	80	100	63	80	100
Fluid		Air (Non-lube)				Hydraulic oil		
Max. operating pressure		1 MPa						
Min. operating pressure		0.1 MPa						
Ambient and fluid temperature (°C)		0~60 (No freezing)						
Allowable surge pressure		–				1.5 MPa		
Backlash		Within 1°						
Cushion		Air cushion				None		
Tolerance in rotating angle		+4° 0						
Allowable kinetic energy	*Allowable kinetic energy (J)	0.98	1.5	2.0	2.9	1.5	2.0	2.9
	Cushion angle	35°						
Rotation time adjustment range For stable operation(s/90°)		0.2 to 2	0.2 to 3	0.2 to 4	0.2 to 5	0.2 to 3	0.2 to 4	0.2 to 5
Weight (g)	90°	1600	2380	4220	7400	2380	4220	7400
	180°	1800	2940	4720	8420	2940	4720	8420

* Allowable kinetic energy of the bumpers equipped model.

Effective Torque

Model	Operation pressure (MPa)										
	0.1	0.15	0.2	0.3	0.4	0.5	0.6	0.7	0.8	0.9	1.0
MRA-50	1.85	2.78	3.71	5.57	7.43	9.27	11.2	13.0	14.9	16.7	18.5
MRA-63	3.44	5.16	6.88	10.4	13.8	17.2	20.6	24.0	27.5	31.0	34.4
MRA-80	6.34	9.52	12.7	19.0	25.3	31.7	30.8	44.4	50.7	57.0	63.4
MRA-100	14.9	22.3	29.7	44.6	59.4	74.3	89.1	104	119	133	149

* The maximum absorbed under proper adjustment of the cushion needle.

Rotation Range of Key Grooves

If air pressure is applied from the A side of the direction indication label, the shaft rotates clockwise. If air pressure is applied from the B side of the direction indication label, the shaft rotates counterclockwise.

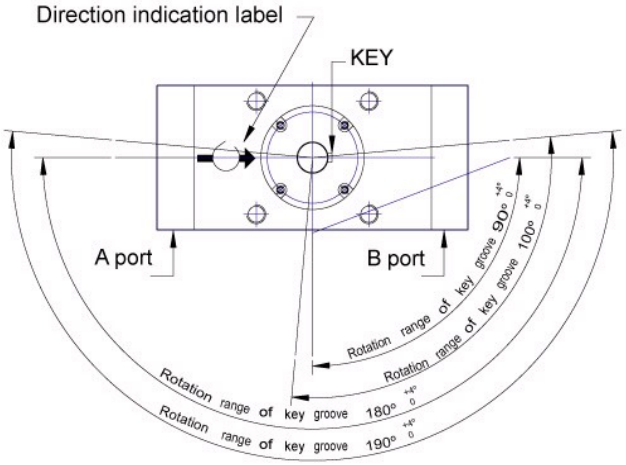

Stopper screw A: For end adjustment in clockwise direction
Stopper screw B: For end adjustment in counter clockwise

Moment of inertia / Rotation time

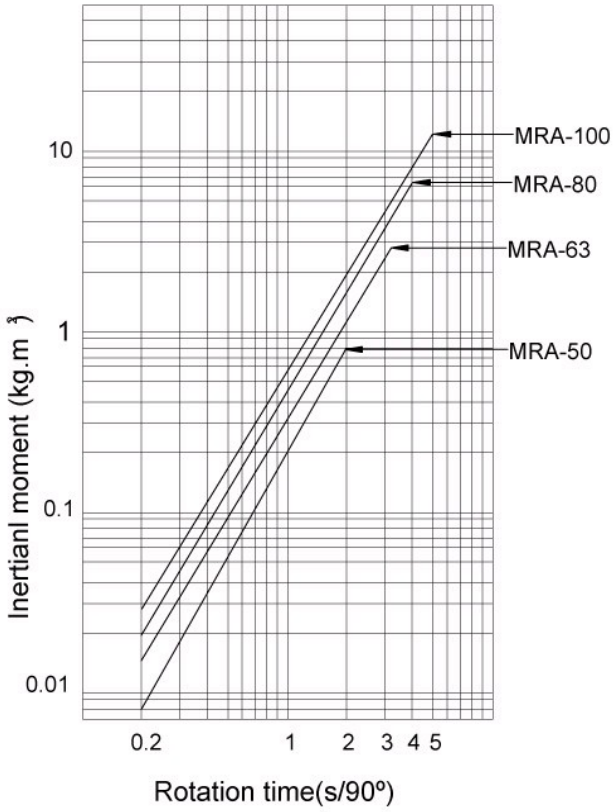

How to Set The Rotation Time

Even if the torque that is generated by the rotary actuator is small, the parts could become damaged depending on the inertia of the load. Therefore, the rotation time should be determined by calculating the load's inertial moment and kinetic energy.

Allowable load on the shaft

Provided that a dynamic load is not generated, a load in the axial direction can be applied up to the value that is indicated in the table below.
However, applications in which the load is applied directly to the shaft should be avoided as much as possible.

	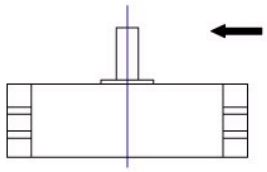	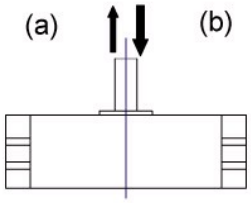	
Model	Allowable radial load(N)	Allowable axial load(N)	
		(a)	(b)
50	196	196	490
63	294	196	588
80	392	196	882
100	588	196	980

Dimensions

With auto switch
Single shaft / MRA

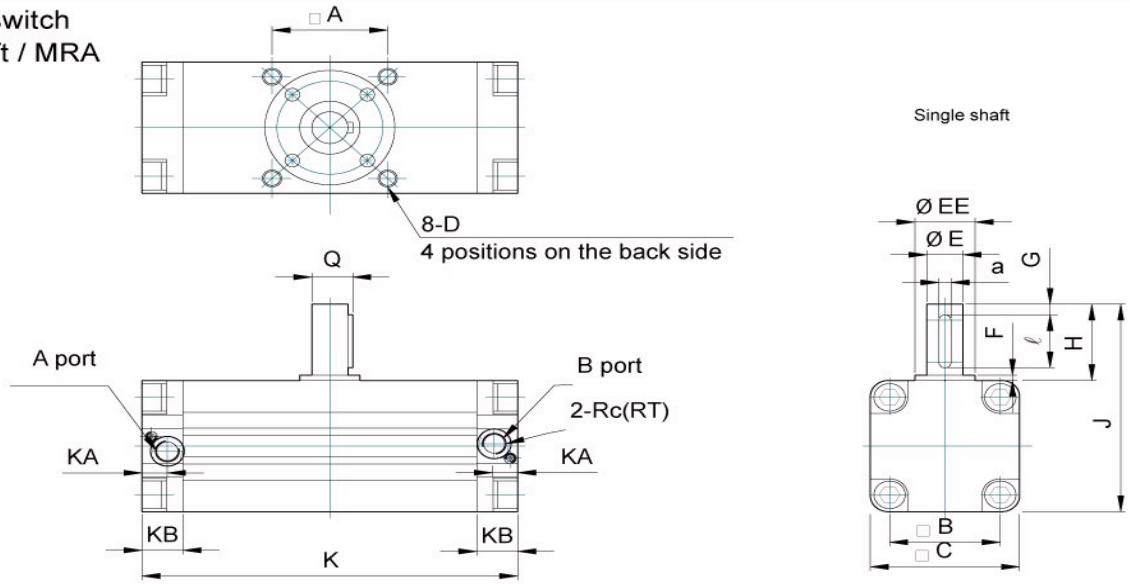

The dimensions below show pressurization to B port *( )are the dimensions for rotation of 180º (mm)

Model	Port size Rc(RT)	A	B	C	D	E	EE	F	G	H	J	K	KA	KB	Q	Key dimensions a	L
MRA-50	1/8	48	46	62	M8x1.25x8	15g6	25h9	2.5	5	36	98	156(189)	8.5	17	17	5 $^{0}_{-0.030}$	25
MRA-63	1/8	60	57	76	M10x1.5x12	17g6	30h9	2.5	5	41	117	175(213.5)	10	20	19.5	6 $^{0}_{-0.030}$	30
MRA-80	1/4	72	70	92	M12x1.75x13	20g6	35h9	3	5	50	142	199(243)	12	23.5	22.5	6 $^{0}_{-0.030}$	40
MRA-100	3/8	85	85	112	M12x1.75x14	25g6	40h9	4	5	60	172	259(325)	12.5	25	28	8 $^{0}_{-0.036}$	45

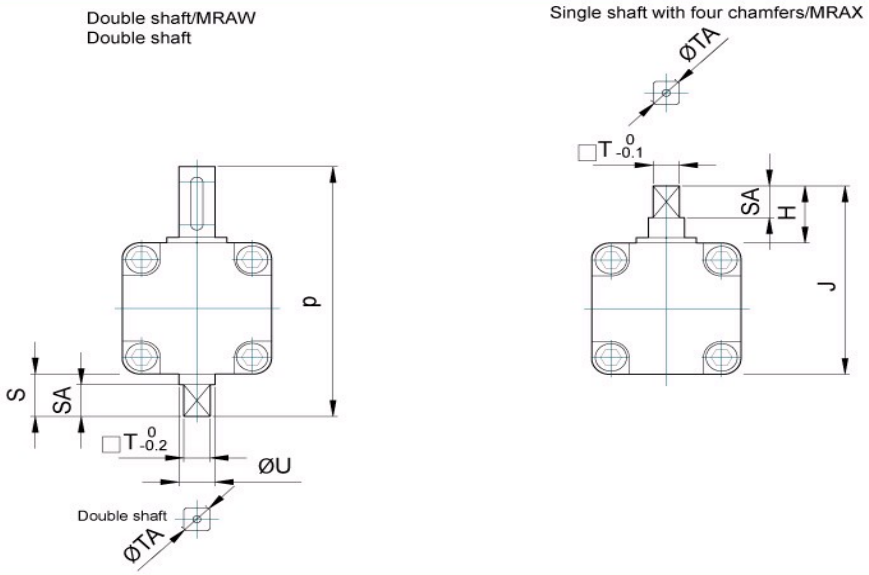

Double (mm)

Model	P	S	SA	T	TA	U
MRAW50	118	20	15	11	14	15g6
MRAW63	139	22	17	13	16	17g6
MRAW80	167	25	20	15	19	20g6
MRAW100	202	30	25	19	24	25g6

Other dimensions are the same as the single shaft (mm)

Model	H	J	SA	T	TA
MRAX50	27	89	15	11	14
MRAX63	29	105	17	13	16
MRAX80	38	130	20	15	19
MRAX100	44	156	25	19	24