※Three double acting pneumatic cylinder design for high power transmission and increase stroke also decrease housing thickness for space-saving design

※Direct drive synchronized via cam disc for self-centering and high repeatability

※Through center hole for workpiece feed.

※The housing;high-tensile aluminium and special hard-coated.

※Auto switch with indicator lamp.

How to order

CKSF-20 R 1

- CKSF-20: Type
- R: Auto switch type
- 1: Number of auto switch

Auto switch type

In-line	Style
RK	Reed swich
RKP	PNP
RKN	NPN

Specifications

Model		CKSF-20	CKSF-32	CKSF-50
Opening/Closing stroke mm (dia)		20	32	50
Cylinder bore (mm)	Open	ø16X3	ø25X3	ø40X3
	Close	ø20X3	ø32X3	ø50X3
Fluid		Air		
Operating pressure MPa (kgf/cm²)		0.2~0.7(2.0to7.1)		
Amblent and fluid temperature ℃(℉)		5~60(41to140)		
Repeatability (mm)		±0.01		
Lubrication		No Lubrication		
Action		Double acting		
Weight (kg)		0.7	1.9	5.8

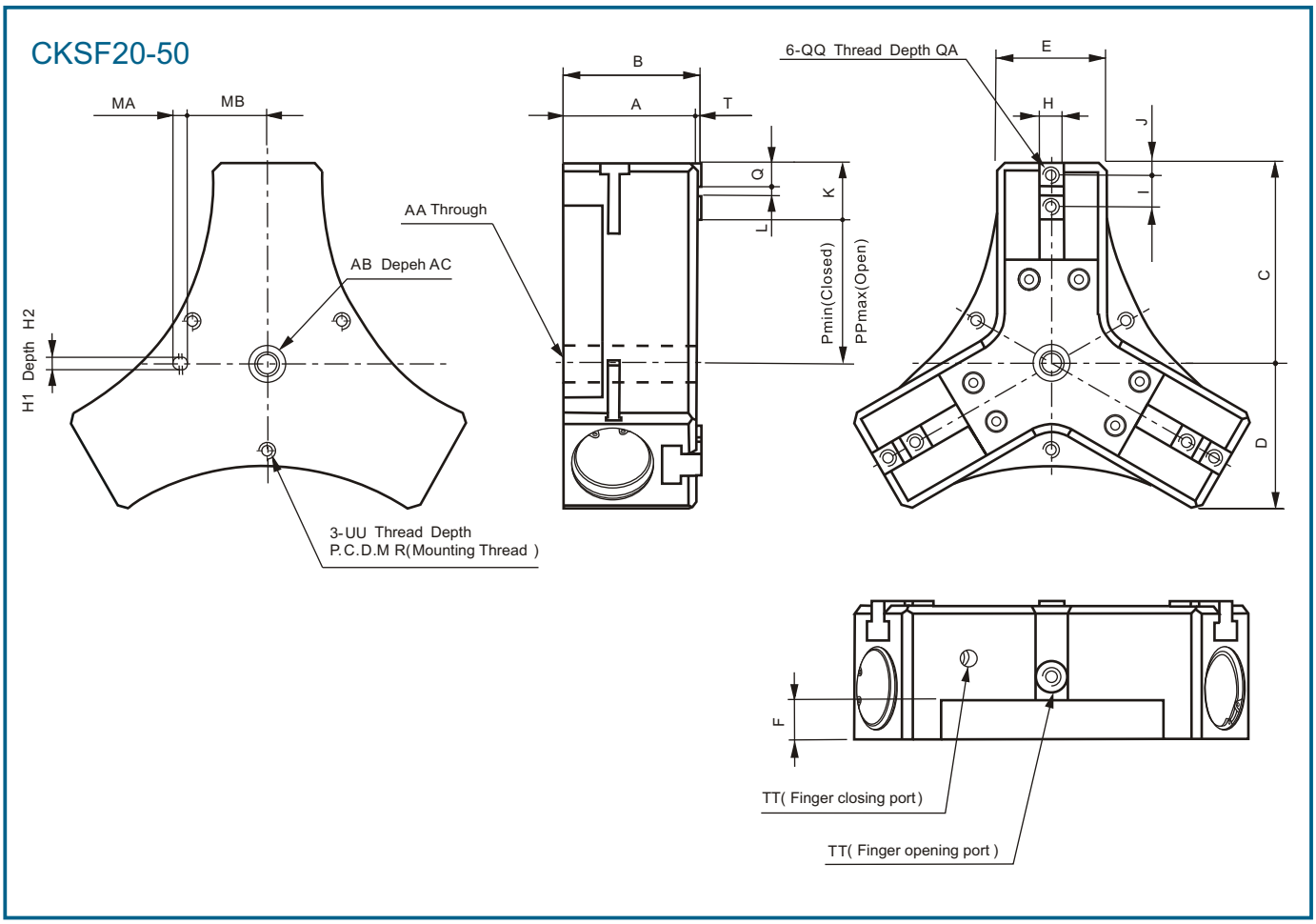

Model	A	B	C	D	E	F	H	I	J	K	L	Q	MA	MB
CKSF-20	39.5	42.5	58	43.85	38	9	$8^{0}_{-0.015}$	12	4.5	21	$3^{+0.03}_{-0}$	9	5	27.5
CKSF-32	56	59	83.5	62	52	12	$12^{0}_{-0.018}$	16	5.5	27	$5^{+0.03}_{-0}$	11	6	36
CKSF-50	85	88	128	91	70	25	$16^{0}_{-0.018}$	20	8	36	$6^{+0.03}_{-0}$	15	10	50

Model	QQ	QA	AA	AB	AC	TT	UU	MR	P	PP	H1	H2	T
CKSF-20	M5x0.8	8	$Ø8^{+0.1}_{-0}$	$Ø8^{+0.03}_{-0}$	1.5	M5x0.8	M6x1.0	60	27	37	$4^{+0.03}_{-0}$	4	3
CKSF-32	M6x1	12	$Ø12^{+0.1}_{-0}$	$Ø12^{+0.03}_{-0}$	2.5	M5x0.8	M8x1.25	78	38.3	54.3	$5^{+0.03}_{-0}$	5	3
CKSF-50	M8x1.25	16	$Ø16^{+0.1}_{-0}$	$Ø24^{+0.05}_{-0}$	5	PT1/8	M8x1.25	110	67	92	$8^{+0.03}_{-0}$	5	3
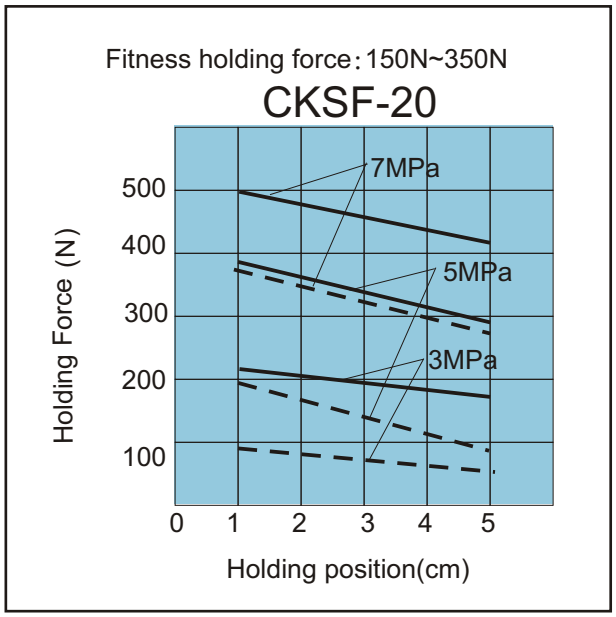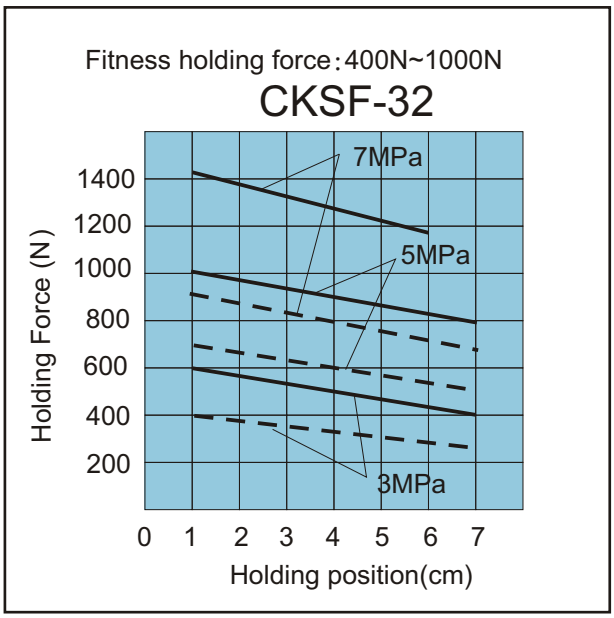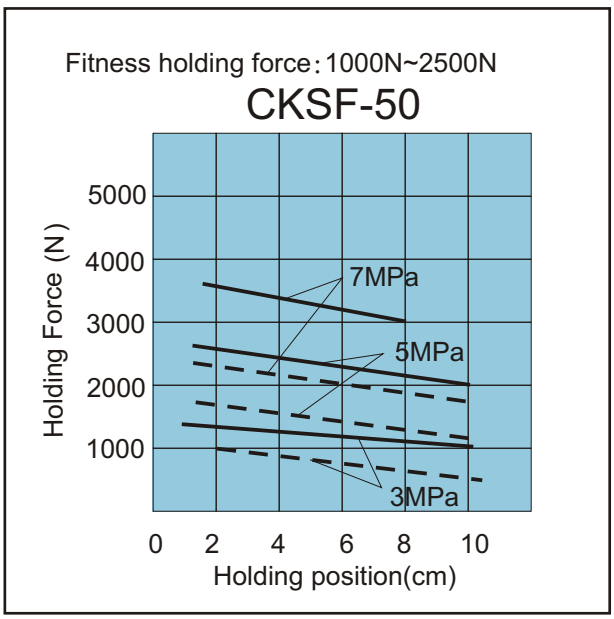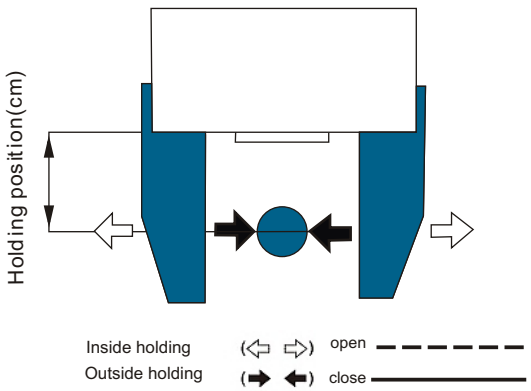
Effective Holding Force