※ Positioning of Square work pieces.
※ Bore Sizes Ø50, 64, 80, 100, 125mm.
※ The housing: high-tensile aluminium and special hard-coated.
※ The 4-jaw grippers is designed in lower height with long stroke.

How to order

CGF — 50 RH 1

Number of auto switch

Auto switch type

In-line	Style
RH	Reed switch
RHN	NPN
RHP	PNP

(Reft to P.78 for detailed auto switch specifications)

Specifications

Model	CGF-50	CGF-64	CGF-80	CGF-100	CGF-125
Stroke mm (dia)	8	12	16	20	26
Fluid	Air				
Operating pressure MPa	0.2~0.8(2.0 to 8.2 kgf/cm^2)				
Ambient and fluid temperature °C (°F)	-10~60 (14 to 140)				
Repeatability(mm)	0.05				
Lubrication	No Lubrication				
Action	Double acting				
Weight (kg)	0.24	0.42	0.85	1.51	2.45

* Maintenance: Re-Lubrication after appr. 1.5 million cycles recommended

Gripping force in relation to the holding position "L" at 6 kgf/cm2

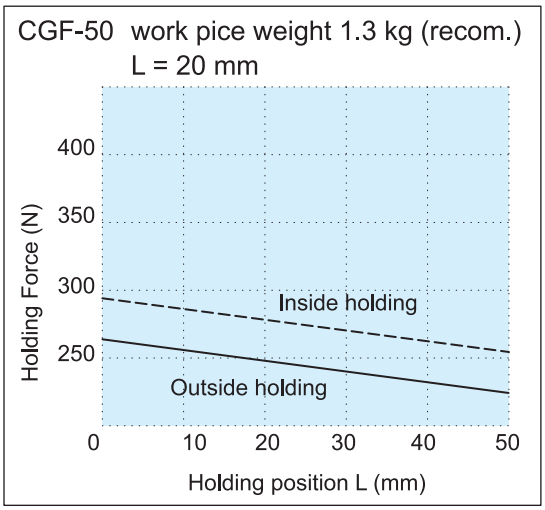

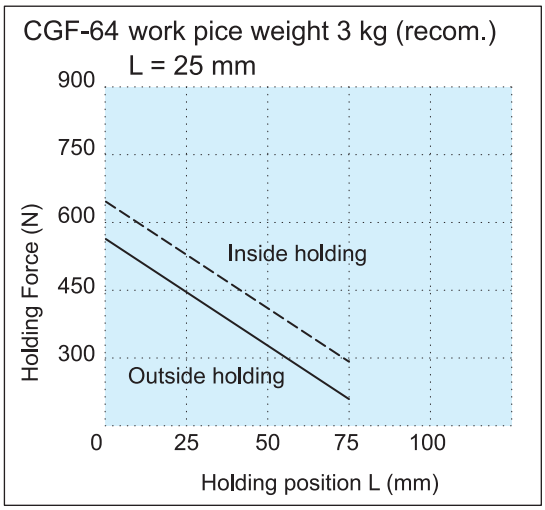

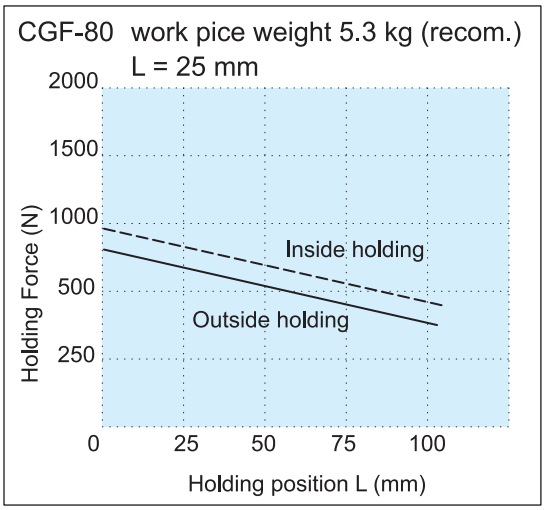

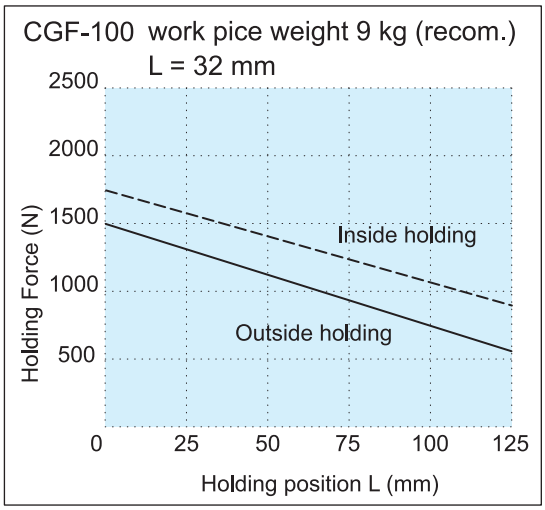

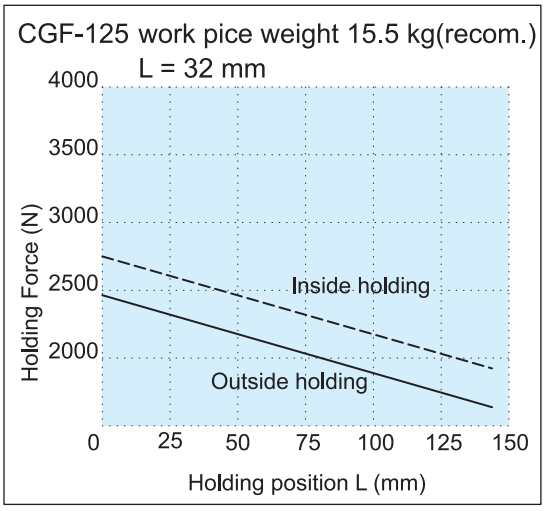

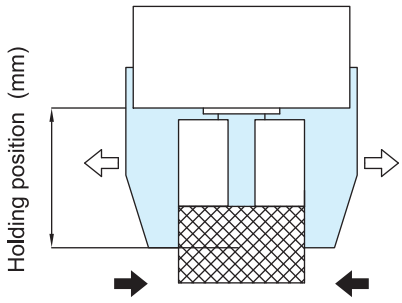

Inside holding force (⇦ ⇨)

Outside holding force (➡ ⬅)

* With reference to the holding force, under the condition must be considered.
* Condition: Friction coefficient, great acceleration impact is expected during work pice rotate.
* It recommend: select a type of arithmetic holding force that can produce 10 to 20 times for work pice weight.

CGF-50~125

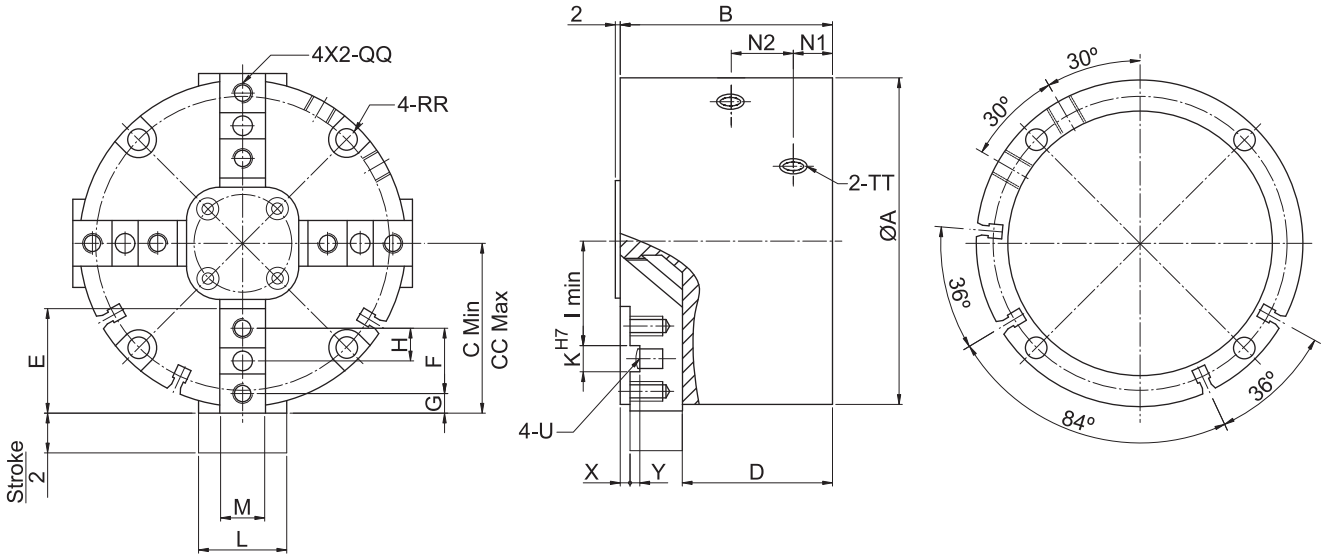

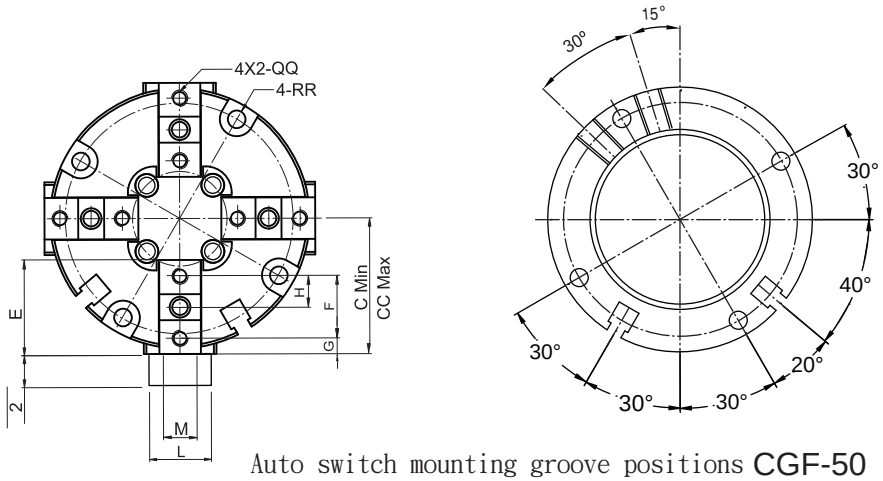

Auto switch mounting groove positions CGF-50

Model	A	B	C	CC	D	E	F	G	H	I	K	L	M	N1	N2
CGF-50	50	39	26.5	30.5	28	18	12	3	6	15	5	14	8.2	8.1	14.8
CGF-64	64	47.5	32	38	32	20	13	4	6.5	19	5	17	10.2	10	16.5
CGF-80	80	56.5	42	50	39.5	25	16	5	8	26	6	23	12.2	10	22
CGF-100	100	65	52	62	46	32	20	6	10	32	8	27	14.2	12	24
CGF-125	125	76	65.5	78.5	53.5	40	24	8.5	12	41	8	30	16.2	13.5	28.5

Model	RR	QQ	TT	U	X	Y
CGF-50	Ø3.4 Thru , Ø7 C / B DP 5 P.C.D 44	M3 X 0.5 DP 7	M5	Ø4	-	2
CGF-64	Ø5.5 Thru , Ø10 C / B DP 6 P.C.D 56	M4 X 0.7 DP 8	M5	Ø4	2	2.5
CGF-80	Ø6.4 Thru , Ø11 C / B DP 7 P.C.D 70	M5 X 0.8 DP 9	M5	Ø5	3	3
CGF-100	Ø6.6 Thru , Ø11 C / B DP 7 P.C.D 90	M6 X 1.0 DP 12	PT 1/8”	Ø6	3	3
CGF-125	Ø8.5 Thru , Ø15 C / B DP 9 P.C.D 112	M6 X 1.0 DP 12	PT 1/8”	Ø6	3	3.5