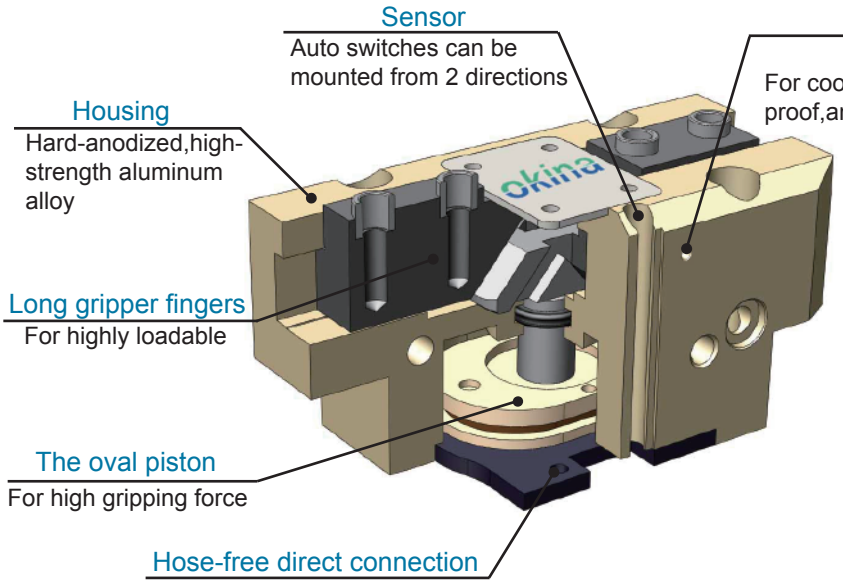

※ Interchangeable with SCHUNK.

How to order

CQZ - 64 - OS L C D RT 1

- OS: Mechanical gripping force safety device for O.D.gripping,even with a drop in presure
- L: Auto-lubrication
- C: Cleanroom
- D: Gripper jaws fit for discontinued CQ series (Refer to P.6)
- RT: Auto switch type
- 1: Number of auto switch

Perpendicular	In-line	Style
RTV	RT	Reed switch
RTNV	RTN	NPN
RTPV	RTP	PNP

Refer to P.9 for detailed auto switch specifications

Model	CQZ-64	CQZ-80	CQZ-100	CQZ-125	CQZ-160	CQZ-200	CQZ-240	CQZ-300	CQZ-380
Opening / Closing stroke (both sides)	6	8	10	13	16	25	30	35	45
Fluid	Air								
Operating pressure MPa (psi)	0.2~0.8(2.0 to 8.2)								
Ambient and fluid temperature ˚C(˚F)	-10~90(14 to 194)								
Repeatability (mm)	0.01								
Lubrication	No Lubrication								
Action	Double acting								
Weight (kg)	0.3	0.55	0.79	1.27	2.5	5.56	8.7	14	30.5

* Maintenance:Re-Lubrication after appr. 1.5 million cycles recommended

CQZ-64~380

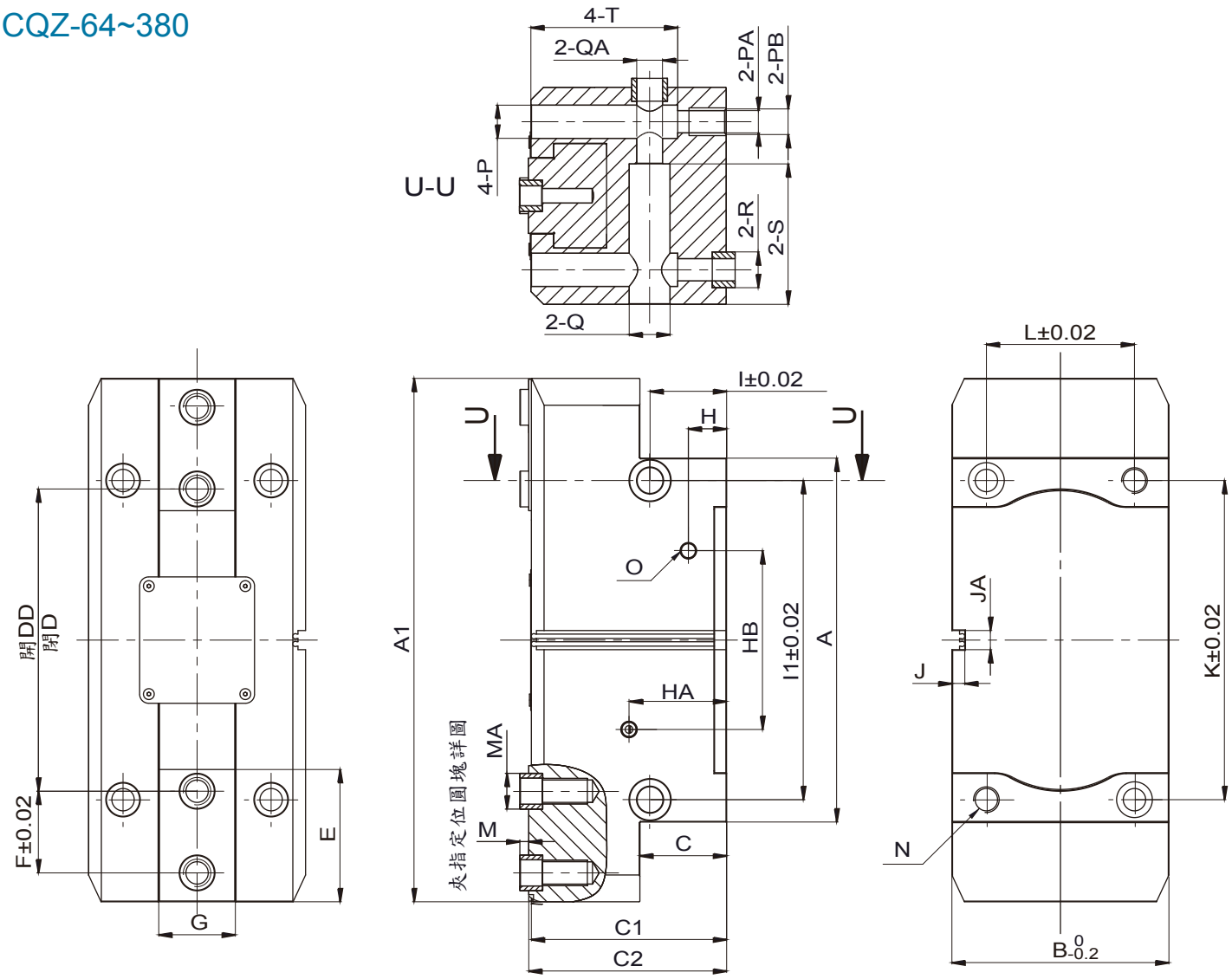

Model	A	A1	B	C	C1	C2	D	DD	E	F	G	H	HA	HB	I	I1
CQZ-64	52	76	36	15	38	39	29.5	41	21	13	12	9.4	15.3	26.68	17.5	42
CQZ-80	63	96	42	20	48	49	36.8	53	26	16	15	12	24	38	20	52
CQZ-100	81	120	50	24	54	55	47	67	32.7	20	17.8	15	23	49	25	66
CQZ-125	100	151	60	26	62	63	61	87	39	24	20.5	15	15	63	30	82
CQZ-160	125	192	72	32	76	77	77	109	50	32	26.5	18	18	74	28	100
CQZ-200	154	234	100	38	90	91	76	126	63	40	34	22	45	82	34	130
CQZ-240	186	270	115	49	106	107	93.5	153.5	69	44	40	25.3	25.3	96	39	160
CQZ-300	210	320	140	51	121	122	125	195	81	46	45.5	30	30	106	45	180
CQZ-380	285	410	170	68	153	155	146.32	236.97	103	64	59	30	76.5	140	60	250

Model	J	JA	K	L	M	MA	N	O	P	PA	PB	Q	QA	R	S	T
CQZ-64	4.5	11	42	27	3.1	Ø6	M5DP6	M5	Ø7.4	Ø4.2	M5	Ø7.2	Ø4.2	Ø8	25	15
CQZ-80	4	11.4	52	32	2.5	Ø8	M5DP6	M5	Ø7.4	Ø4.2	M5	Ø9	Ø5.1	Ø8	24	22
CQZ-100	4.5	12.58	66	38	3.5	Ø10	M6DP8.2	M5	Ø9	Ø5.1	M6	Ø11	Ø6.6	Ø10	28	35
CQZ-125	4.3	14	82	45	3	Ø10	M6DP13	PT1/8"	Ø11	Ø6.8	M8	Ø14	Ø9	Ø12	38	39.5
CQZ-160	5.25	16	100	56	4	Ø14	M10DP17	PT1/8"	Ø11	Ø6.8	M8	Ø14	Ø9	Ø12	41	55.5
CQZ-200	4.5	12.58	130	70	4	Ø16	M10DP16	PT1/8"	Ø14	Ø8.5	M10	Ø17	Ø10.2	Ø14	23	70
CQZ-240	8.6	16	160	80	4	Ø16	M12DP21	PT1/8"	Ø18	Ø10.2	M12	Ø19	Ø12.5	Ø16	65	80.5
CQZ-300	7	15	180	96	6	Ø22	M16DP28	PT1/4"	Ø20	Ø14	M16	Ø25	Ø16.2	Ø22	90	90
CQZ-380	10.6	15	250	116	7	Ø28	M20DP38	PT1/4"	Ø26	Ø17.5	M20	Ø32	Ø20.2	Ø28	110	115

Gripping force in relation to the holding position "L" at 6 kgf/cm2

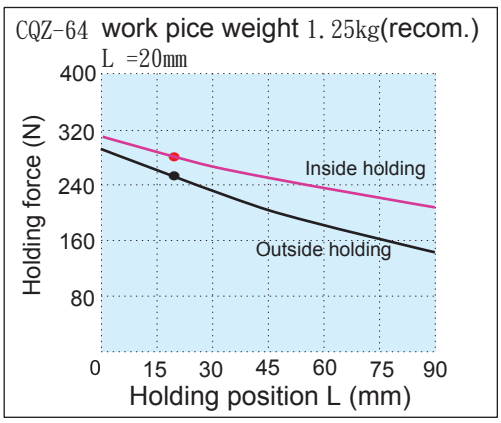

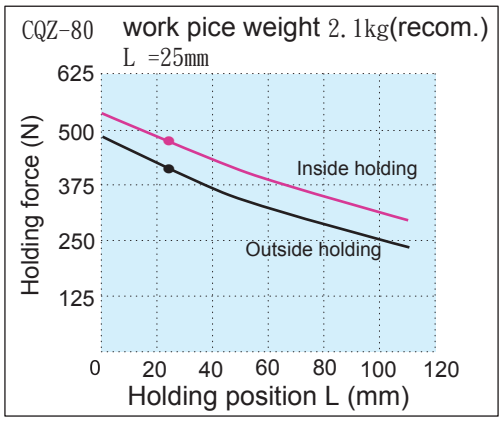

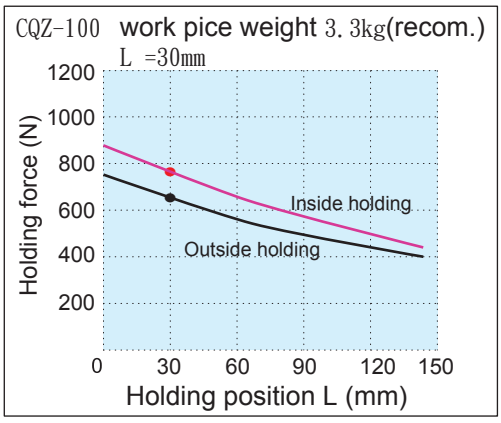

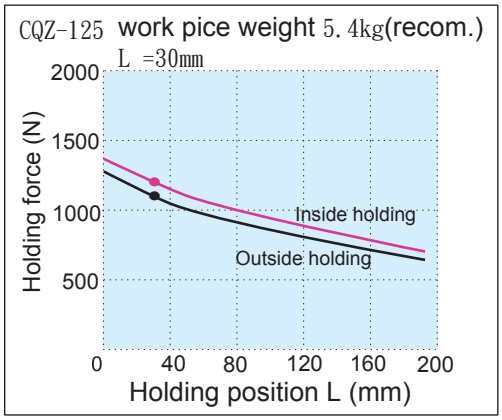

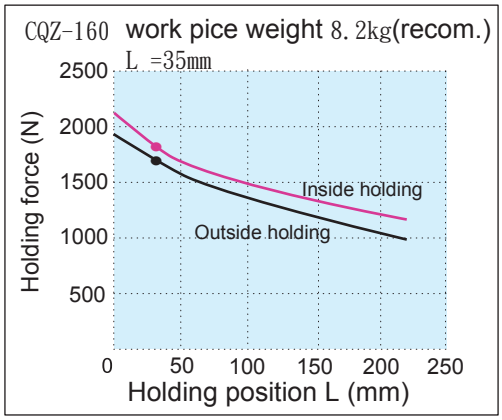

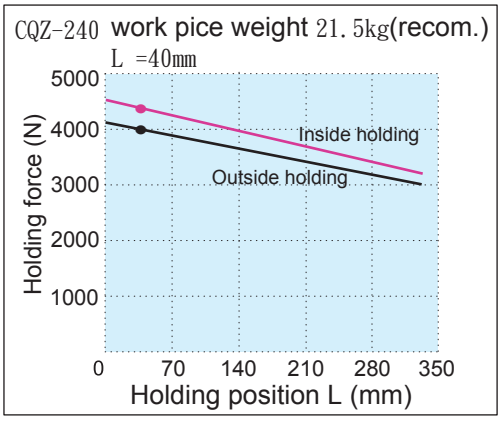

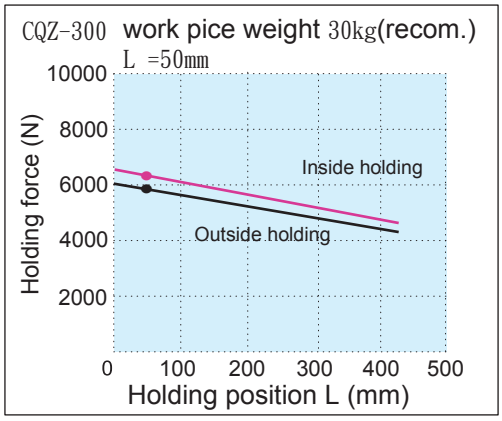

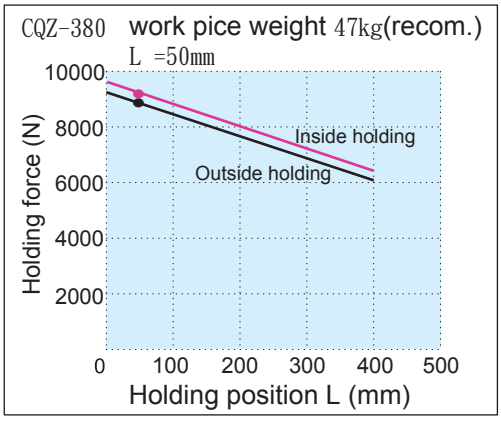

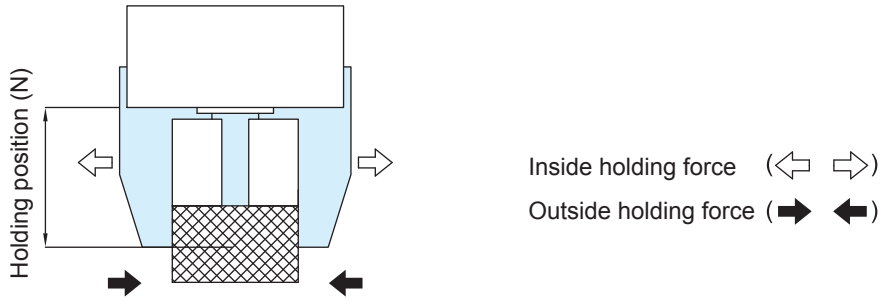

＊ It recommend:select a type of arithmetic holding force that can produce 10 to 20 times for work pice weight.

＊Condition:Friction coefficient,great acceleration impact is expected during work pice rotate.

ⓘAuto-lubrication series(L)/Clean series(C)

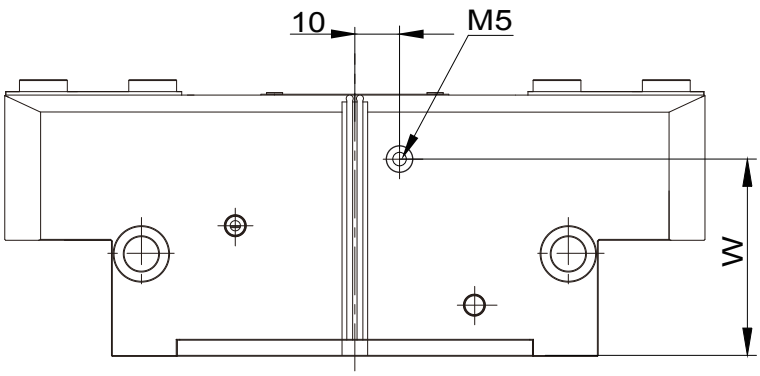

ⓘ Auto-lubrication function control by lubrication equipment, fit ones without using dust cover

ⓘ Auto-lubrication and Clean Series of dimension same, order no. different

Model	CQZ-64	CQZ-80	CQZ-100	CQZ-125	CQZ-160	CQZ-200	CQZ-240	CQZ-300	CQZ-380
W	28	35	45	52	65	70	81	90	115

Hose-free direct connection

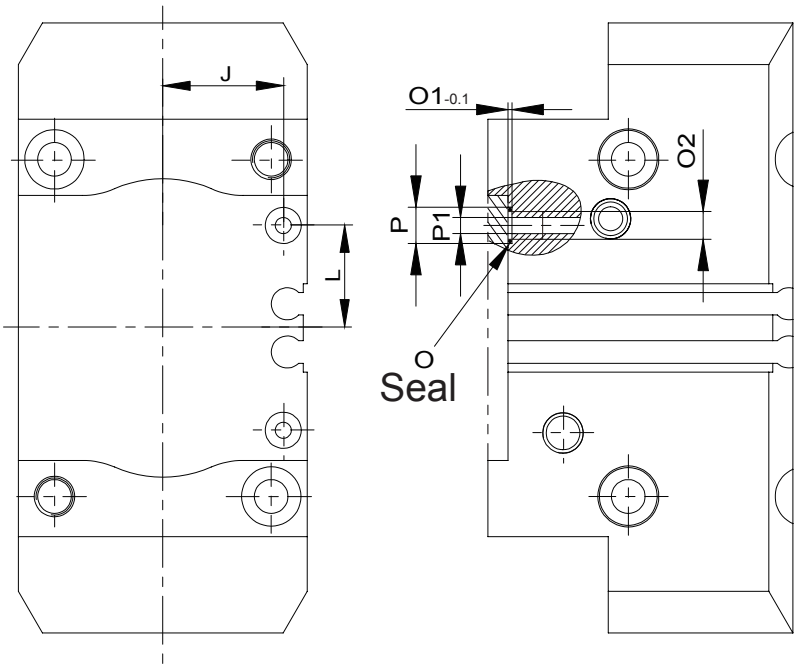

Model	J	L	O	O1	O2	P	P1
CQZ-64	15	12.8	Ø3x1	0.6	M3	Ø5	Ø3
CQZ-80	18	18.5	Ø3x1	0.6	M3	Ø5	Ø3
CQZ-100	22	18.5	Ø4x1.5	1.1	M3	Ø7	Ø3
CQZ-125	22	18.5	Ø4x1.5	1.1	M5	Ø7	Ø4
CQZ-160	22	18.5	Ø4x1.5	1.1	M5	Ø7	Ø4
CQZ-200	47	41	Ø4x1.5	1.1	M5	Ø7	Ø4
CQZ-240	22	18.5	Ø4x1.5	1.1	M5	Ø7	Ø4
CQZ-300	22	18.5	Ø4x1.5	1.1	M5	Ø7	Ø4
CQZ-380	70	70	Ø6x1.5	1.1	M6	Ø9	Ø6

Finger moment

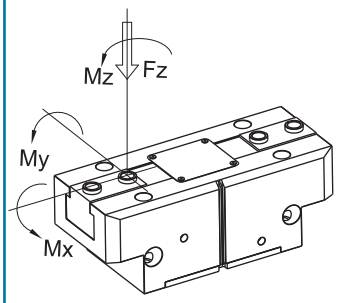

Model	CQZ-64	CQZ-80	CQZ-100	CQZ-125	CQZ-160	CQZ-200	CQZ-240	CQZ-300	CQZ-380
Mx(Nm)	40	60	80	120	170	180	260	400	560
My(Nm)	60	95	115	145	180	200	250	400	560
Mz(Nm)	40	55	70	100	130	140	160	250	370
Fz(N)	1100	1500	2000	2800	4300	5000	6200	8000	10000

Auto switch setting position

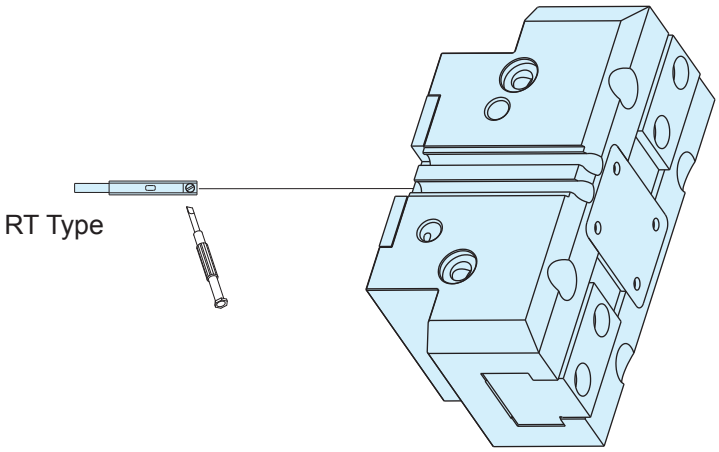

The drawing shows the finger blanks which can be produced by the customer.

CQZ64~200 and CGZ interchangeability:Yes

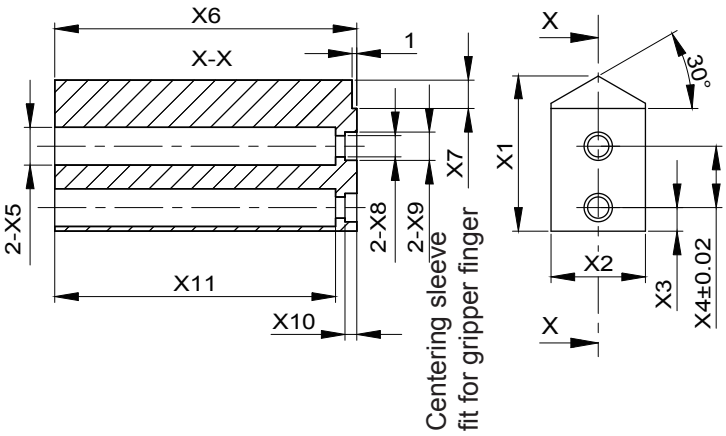

Model	X1	X2	X3	X4	X5	X6
CGZ-64	32	20	5	13	Ø8	64
CGZ-80	41	25	6	16	Ø10	80
CGZ-100	51	30	7	20	Ø11	100
CGZ-125	60	35	9.5	24	Ø11	125
CGZ-160	80	40	10	32	Ø18	160
CGZ-200	96	45	15	40	Ø20	200
CQZ-240	109	50	15.5	44	Ø20	220
CQZ-300	130	60	20	46	Ø26	200

Model	X7	X8	X9	X10	X11
CGZ-64	6	Ø4.5	Ø6	2.5	59.5
CGZ-80	6	Ø5.5	Ø8	2.5	74.5
CGZ-100	11.5	Ø6.6	Ø10	3	94.5
CGZ-125	10	Ø6.6	Ø10	3	119.5
CGZ-160	20	Ø11	Ø14	4	151
CGZ-200	21	Ø13.5	Ø16	4	186
CQZ-240	21	Ø13	Ø16	4	204
CQZ-300	21	Ø17.5	Ø22	6	185

Gripper jaws fit for discontinued CQ series (D)

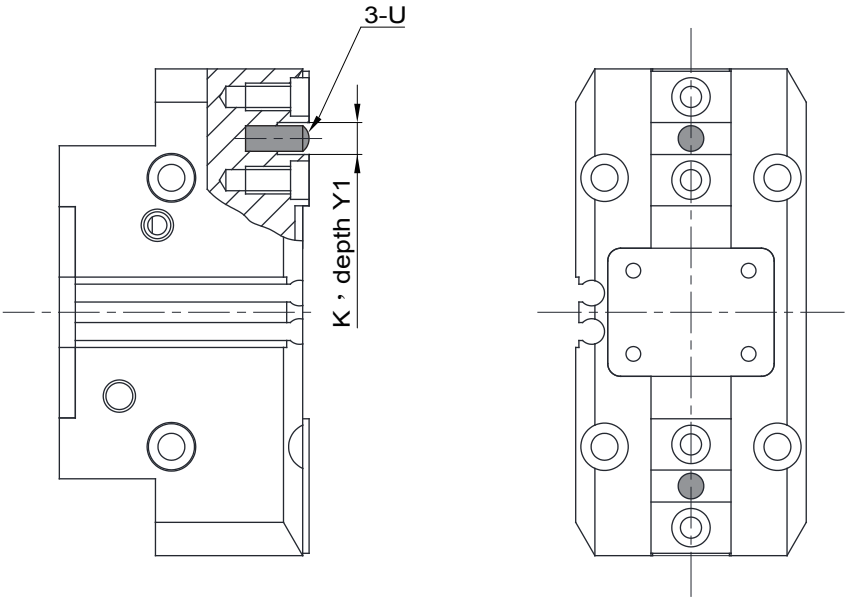

Model	CQZ-64	CQZ-80	CQZ-100	CQZ-125	CQZ-160
U	Ø4	Ø4	Ø5	Ø6	Ø8
K	5	5	6	8	10
Y1	2.5	3	3	3.5	4

CQZ-OS Gripping force safety device for O.D gripping,even with a drop in preasure.

CQZ-64OS~380OS

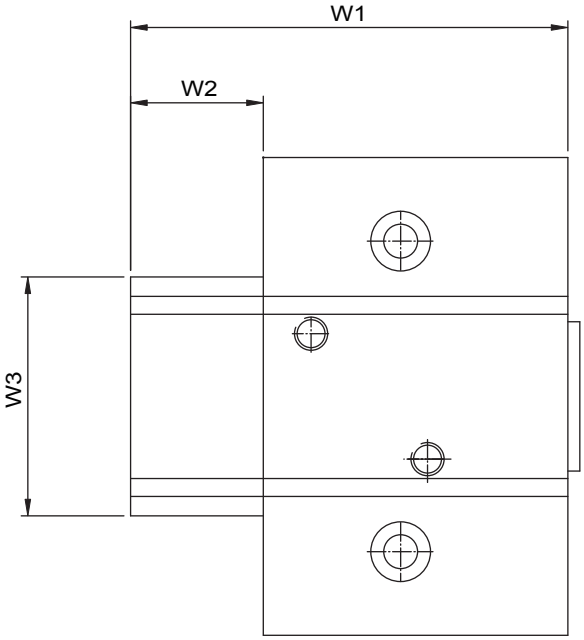

Refer to P.7 for gripping force

Model	CQZ-64OS	CQZ-80OS	CQZ-100OS	CQZ-125OS	CQZ-160OS	CQZ-200OS	CQZ-240OS	CQZ-300OS	CQZ-380OS
W1	28	35	45	52	65	70	81	90	115
W2	28	35	45	52	65	70	81	90	115
W2	28	35	45	52	65	70	81	90	115

Gripping force in relation to the holding position "L" at 6 kgf/cm2

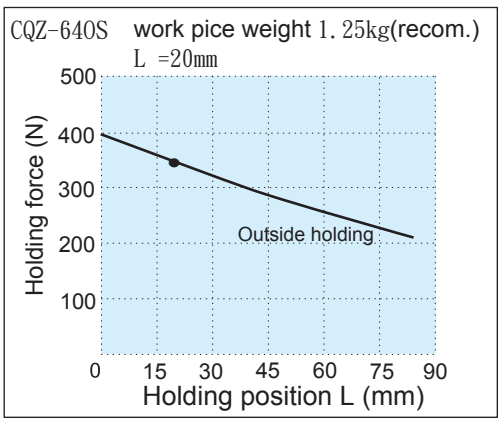

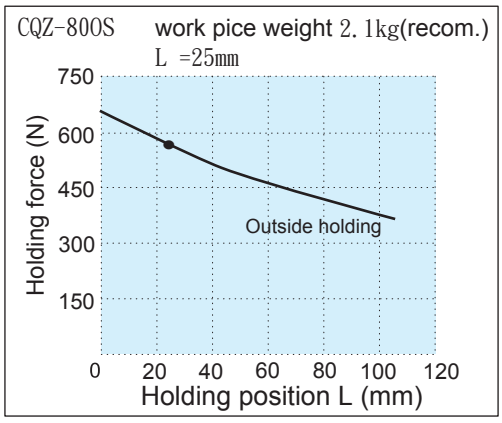

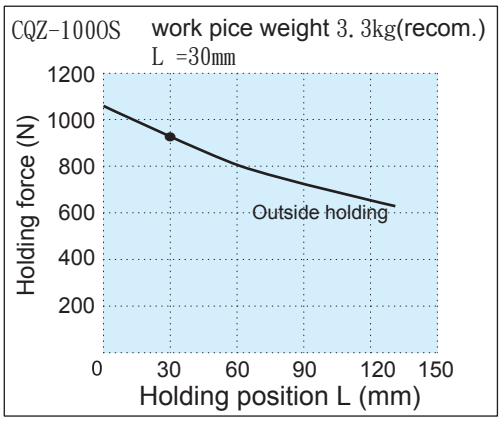

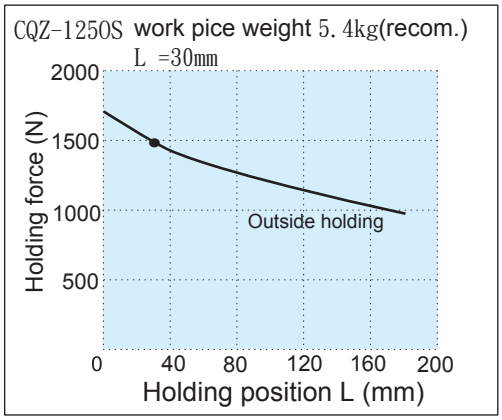

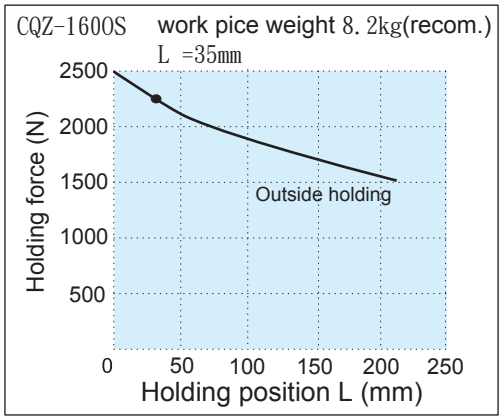

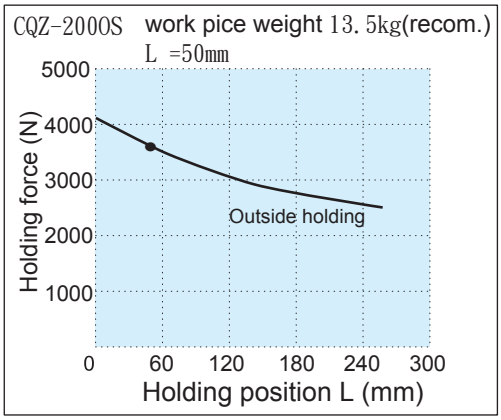

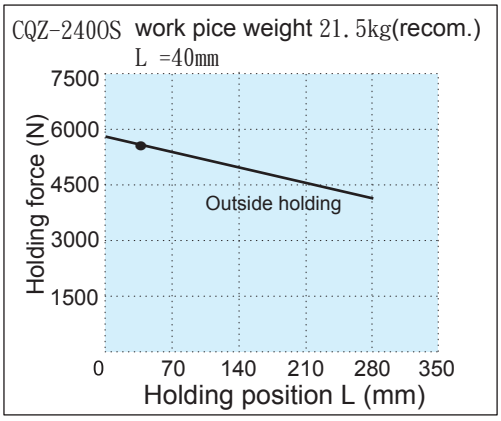

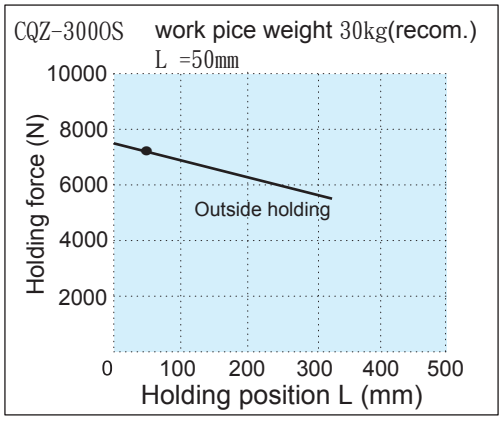

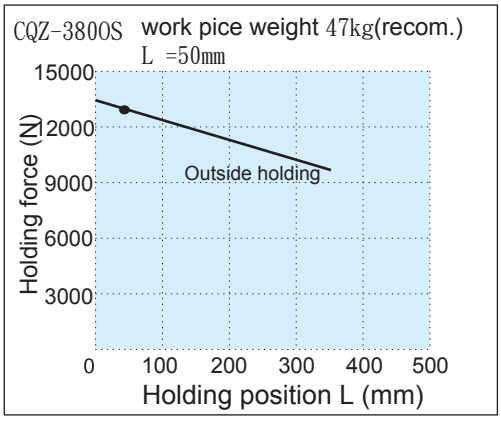

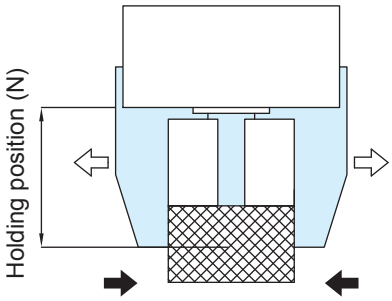

Inside holding force (⇦ ⇨)

Outside holding force (➡ ⬅)

＊ It recommend:select a type of arithmetic holding force that can produce 10 to 20 times for work pice weight.

＊Condition:Friction coefficient,great acceleration impact is expected during work pice rotate.

CQ CQZ

Finger blanks mounting interchangeability:yes

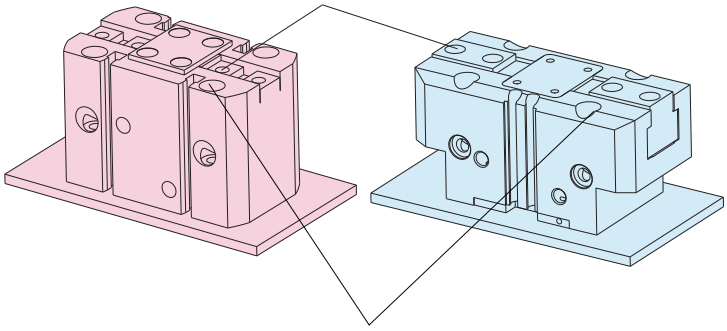

Housing mounting interchangeability:yes

CQ CQZ

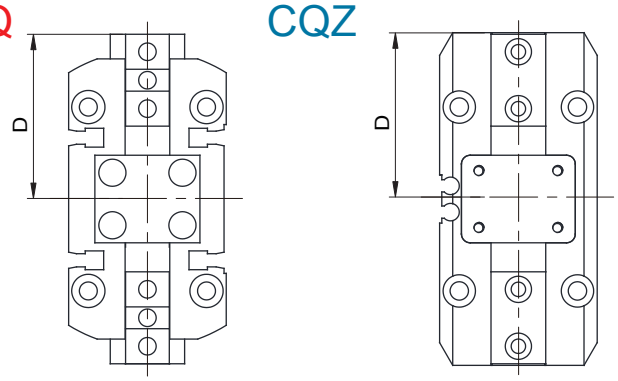

Unprotected exposure out of housing when gripper jaws open

Protection from housing when gripper jaws open

CQ \ CQZ	64	80	100	125	160
D	38	48	60	75.5	96

How to fit discontinued CQ finger blanks on CQZ gripper for maintenance

Without alter for discontinued CQ finger blanks , please order option CQZ (Refer to .P6)

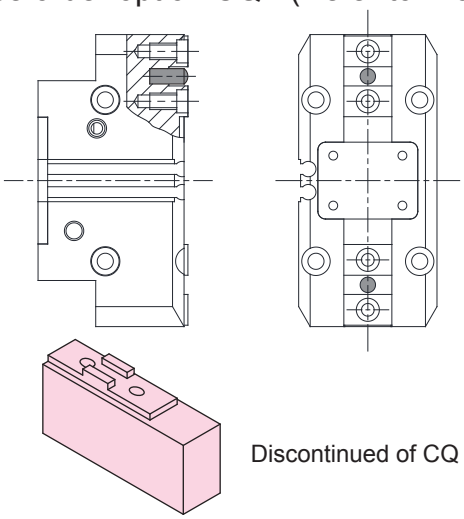

Discontinued of CQ finger blanks

Alter for discontinued CQ finger blanks , please order standard CQZ

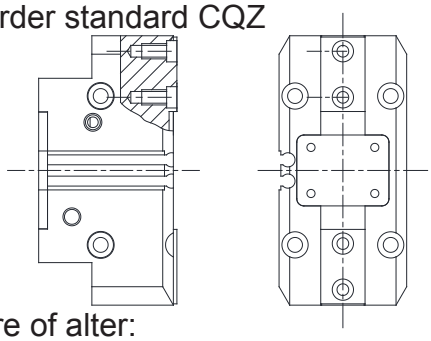

*Procedure of alter:

① ②cut two blocks ③Add two counter bore (Refer to P.5 drawing of finger blanks)

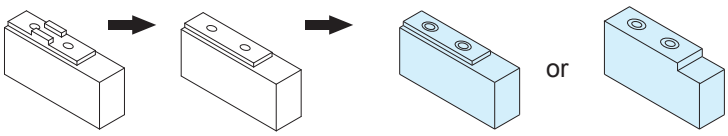

Auto switch interchangeability: No

CQ

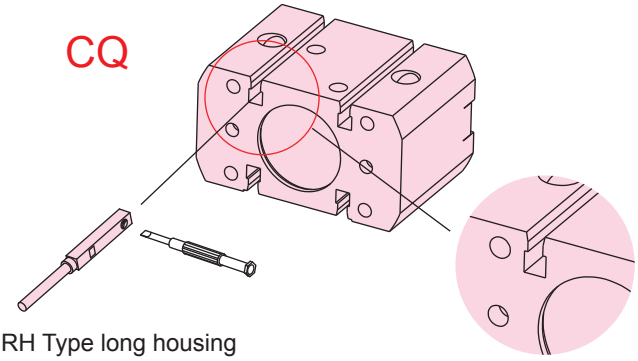

RH Type long housing

Square slot for auto switch

CQZ

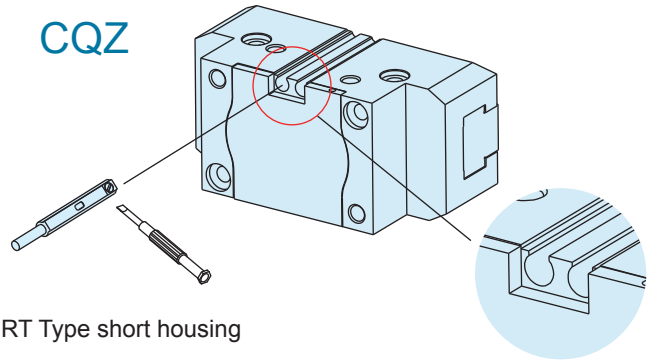

RT Type short housing

Round slot for auto switch

Applicable Type: CGZ,CGZT,CGZF,CGZH,CG2(16~25),CG2L(16~25), CQZ,CU,CKL,GRY,MRB,MRBS,MRC

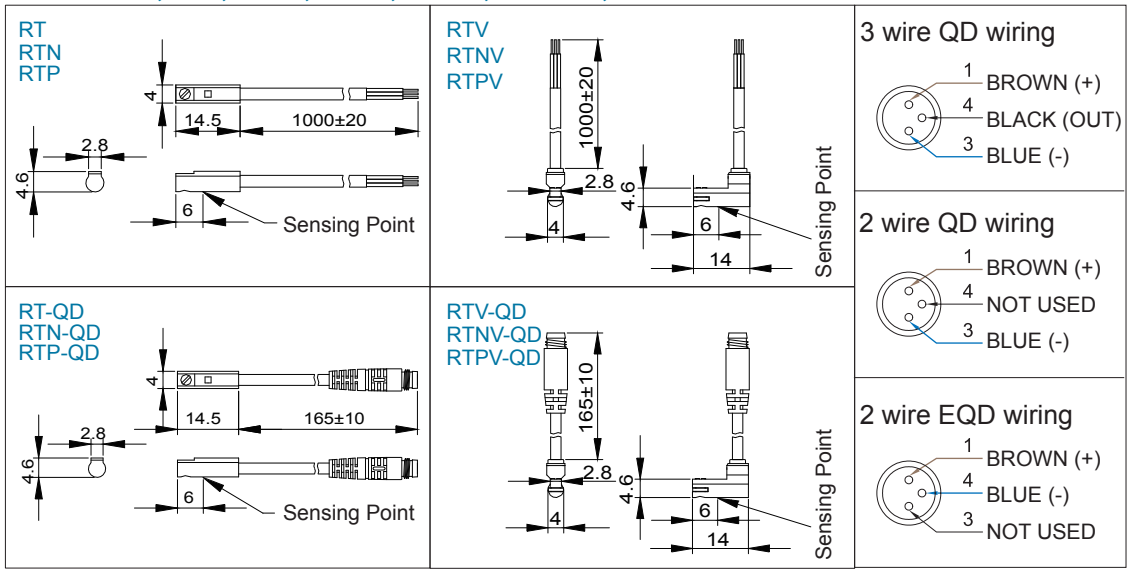

Specifications

	RT/RTV	RTN/RTNV	RTP/RTPV
Switching logic	SPST Normally Open	Solid State Output, Normally Open	
Sensor Type	Reed Switch	NPN Current Sinking	PNP Current Sourcing
Operating Voltage	5~120V DC/AC	5~28V DC	
Switching Current	4~20mA max.	50mA max.	
Switching Rating (NOTE 1.)	0.6W max.	1.5W max.	
Current Consumption	–	10mA@24 DC max.	
Voltage Drop	2.5V max.@40mA DC	0.5V@50mA max.	
Leakage Current	–	0.01mA max.	
Indicator	Red LED		Red or Green LED
Cable	2.6 Ø,2C,PVC	2.6 Ø,3C,PVC	
Max.Switch Frequency	200Hz	1000Hz	
Magnet Requirement	40Gauss		
Temperature Range	-10~70°C		
Shock (NOTE 2.)	30G	50G	
Vibration	90 m/s2 (9G), Double amplitude 1.5 mm		
Enclosure Classification	IP67		
Protection Circuit	None	Power Source Reverse polarity , Surge Suppression , Short-circuit	

NOTE:
1.WARNING:Never exceed rating (Watt=Voltage x Amperage).Permanent demage to sensor will occur.
2.Sin wave / X,Y,Z 3 directions / 3 times each direction / 11 ms each time.

Connect Diagram

RT/RTV

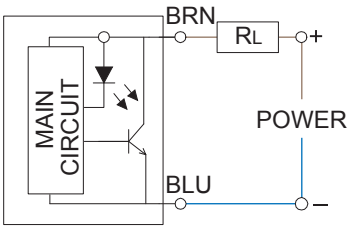

RTN/RTNV

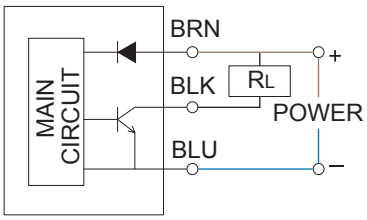
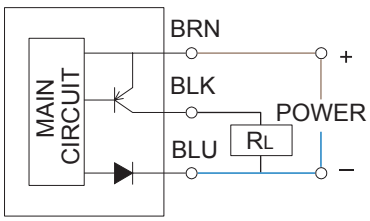
RTP/RTPV