※ Gripping force safe device.
※ Bore Sizes ø50, 64, 80, 100, 125,160mm Compact body reliable design high clamping force.
※ The housing:high-tensile aluminium and special hard-coated.
※ Auto switch with indicator lamp.
※ Spring-packaged pressure plate are optionally available.
※ The 3-jaw grippers is designed in lower height with long stroke.

How to order

CG - 50 - OS P RH 1

- 1 — Number of auto switch
- RH — Auto switch type

In-line	Style
RH	Reed switch
RHN	NPN
RHP	PNP

(Reft to P.78 for detailed auto switch specifications)

- P — Spring-loaded pressure plate
- OS — Mechanical gripping force safety device for O.D. gripping, even with a drop in presure

Specifications

Model	CG-50	CG-64	CG-80	CG-100	CG-125	CG-160
Opening / Closing stroke mm (dia)	8	12	16	20	26	32
Fluid	Air					
Operating pressure MPa	0.2~0.8(2.0to8.2kgf/cm^2)					
Ambient and fluid temperature °C (°F)	-10~60 (14 to 140)					
Repeatability(mm)	0.05					
Lubrication	No Lubrication					
Action	Double acting					
Weight (kg)	0.23	0.41	0.8	1.4	2.4	4.7

* Maintenance: Re-Lubrication after appr. 1.5 million cycles recommended

Gripping force in relation to the holding position "L" at 6 kgf/cm²

CG-50 work pice weight 1.3 kg(recom.)
L= 20 mm

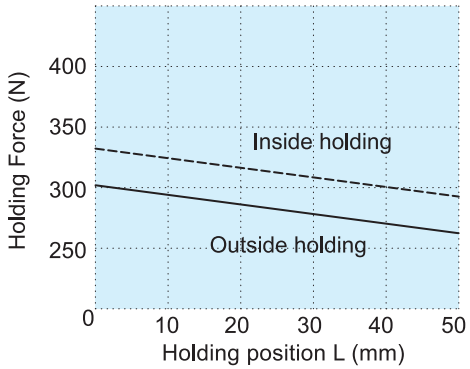

CG-64 work pice weight 3 kg(recom.)
L= 25 mm

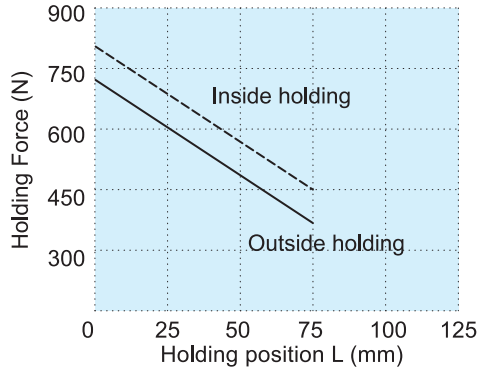

CG-80 work pice weight 5.3 kg(recom.)
L= 25 mm

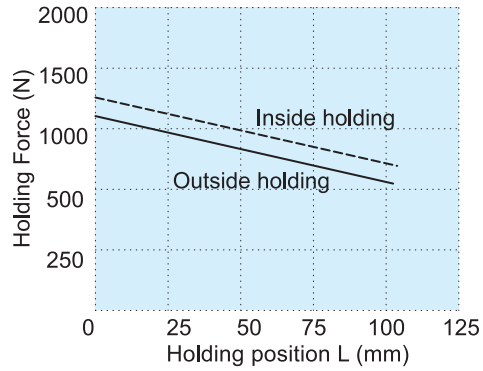

CG-100 work pice weight 9 kg(recom.)
L= 32 mm

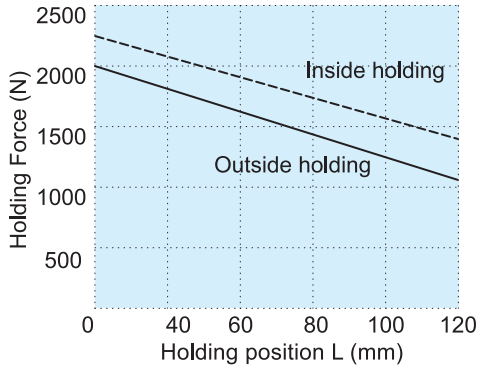

CG-125 work pice weight 15.5 kg(recom.)
L= 32 mm

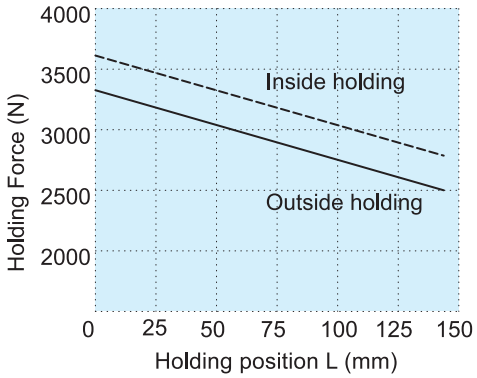

CG-160 work pice weight 25 kg(recom.)
L= 40 mm

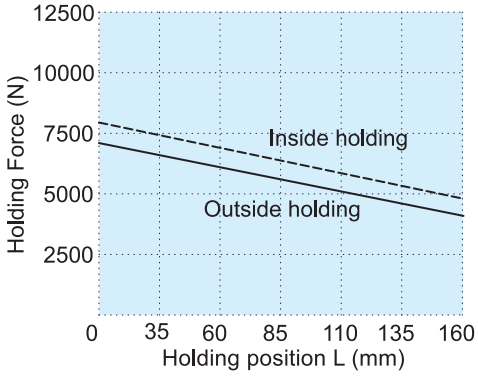

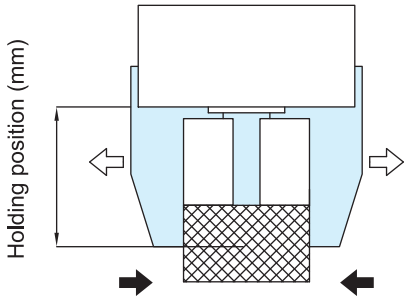

Inside holding force (⇦ ⇨)

Outside holding force (➡ ⬅)

* With reference to the holding force, under the condition must be considered.
* Condition: Friction coefficient, great acceleration impact is expected during work pice rotate.
* It recommend: select a type of arithmetic holding force that can produce 10 to 20 times for work pice weight.

Dimensions

CG-50~160

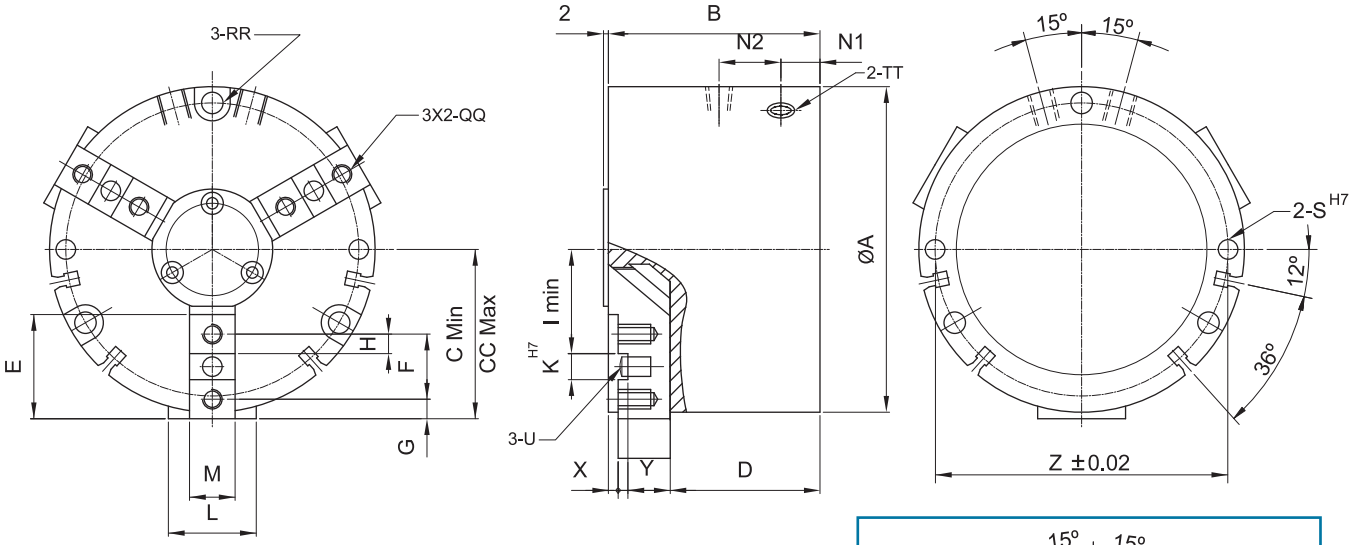

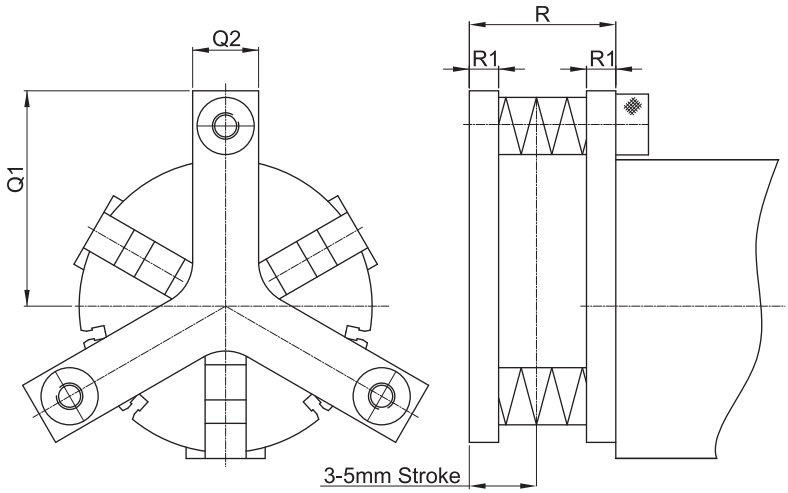

Spring-loaded Pressure Plate(P)Type

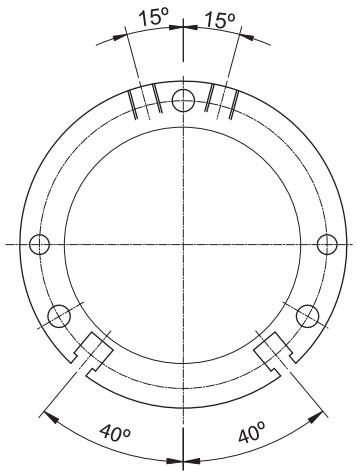

Auto switch mounting groove positions CG-50 and CG-160

Model	A	B	C	CC	D	E	F	G	H	I	K	L	M	N1	N2	Q1	Q2	R
CG-50	50	39	26.5	30.5	28	18	12	3	3.5	15	5	14	8.2	8.1	14.8	38	12	25
CG-64	64	47.5	32	38	32	20	13	4	4	19	5	17	10.2	10	16.5	44	14	25
CG-80	80	56.5	42	50	39.5	25	16	5	5	26	6	23	12.2	10	22	55	14	25
CG-100	100	65	52	62	46	32	20	6	6	32	8	27	14.2	12	24	70	20	25
CG-125	125	76	65.5	78.5	53.5	40	24	8.5	8	41	8	30	16.2	13.5	28.5	85	20	25
CG-160	160	95	85	101	67	50	32	9	11	55	10	40	20.2	15.5	32.5	100	25	25

Model	R1	RR	QQ	S	TT	U	X	Y	Z
CG-50	5	Ø3.4 Thru , Ø7 C / B DP 5 P.C.D 44	M3 X 0.5 DP 7	Ø3DP8	M5	Ø4	-	2	45
CG-64	5	Ø5.5 Thru , Ø10 C / B DP 6 P.C.D 56	M4 X 0.7 DP 8	Ø4DP10	M5	Ø4	3	2.5	56
CG-80	5	Ø6.4 Thru , Ø11 C / B DP 7 P.C.D 70	M5 X 0.8 DP 9	Ø5DP10	M5	Ø5	3	3	70
CG-100	6	Ø6.6 Thru , Ø11 C / B DP 7 P.C.D 90	M6 X 1.0 DP 12	Ø5DP12	PT 1/8”	Ø6	3	3	90
CG-125	6	Ø8.5 Thru , Ø15 C / B DP 9 P.C.D 112	M6 X 1.0 DP 12	Ø6DP16	PT 1/8”	Ø6	3	3.5	112
CG-160	6	Ø9 Thru , Ø15 C / B DP 9 P.C.D 146	M8 X 1.25DP 20	Ø6DP20	PT 1/8”	Ø8	4	4	146

Gripping force safety device

Operating pressure min. 5 bars,max.6.5 bars

Gripping force = pneum. gripping force + spring force

Gripping force in relation to the holding position "L" at 6 kgf/cm²

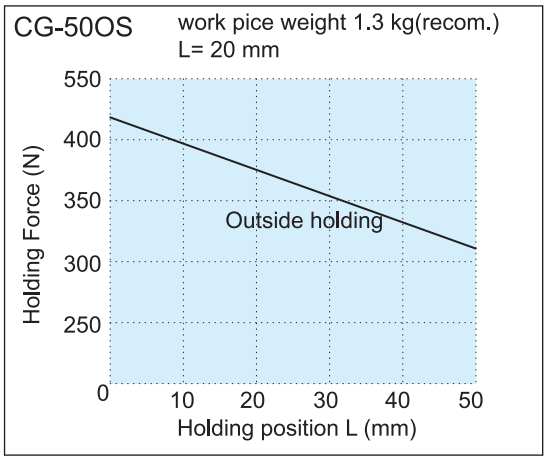

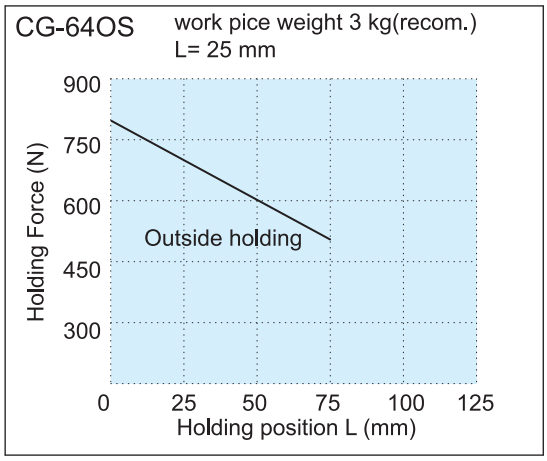

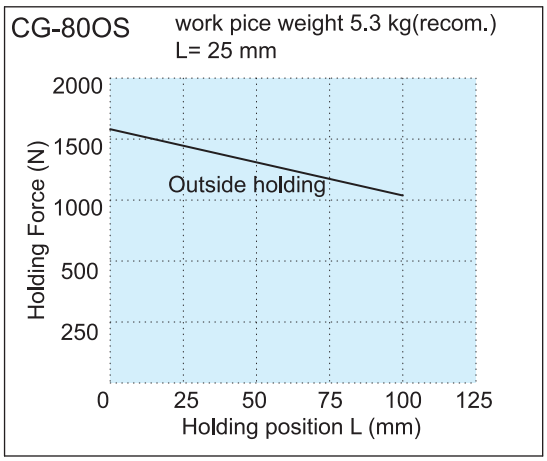

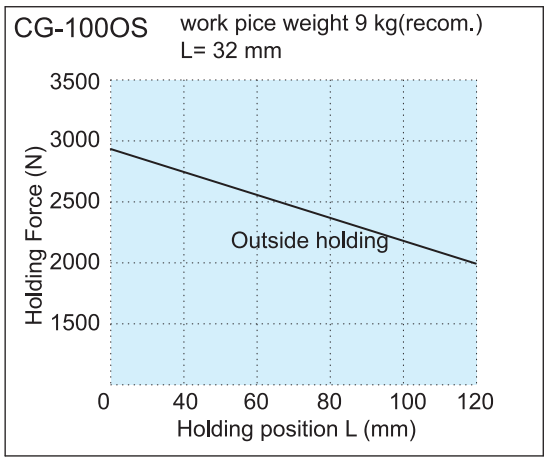

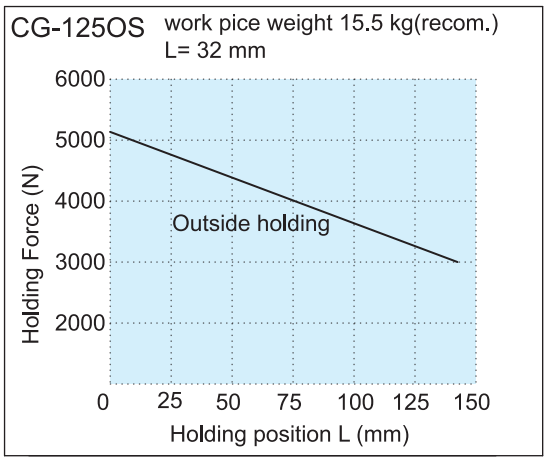

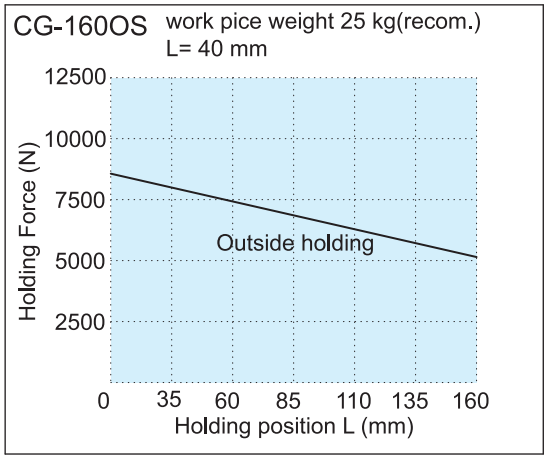

Gripping force safety device for O.D gripping, even with a drop in preasure.

CG-50OS~160OS

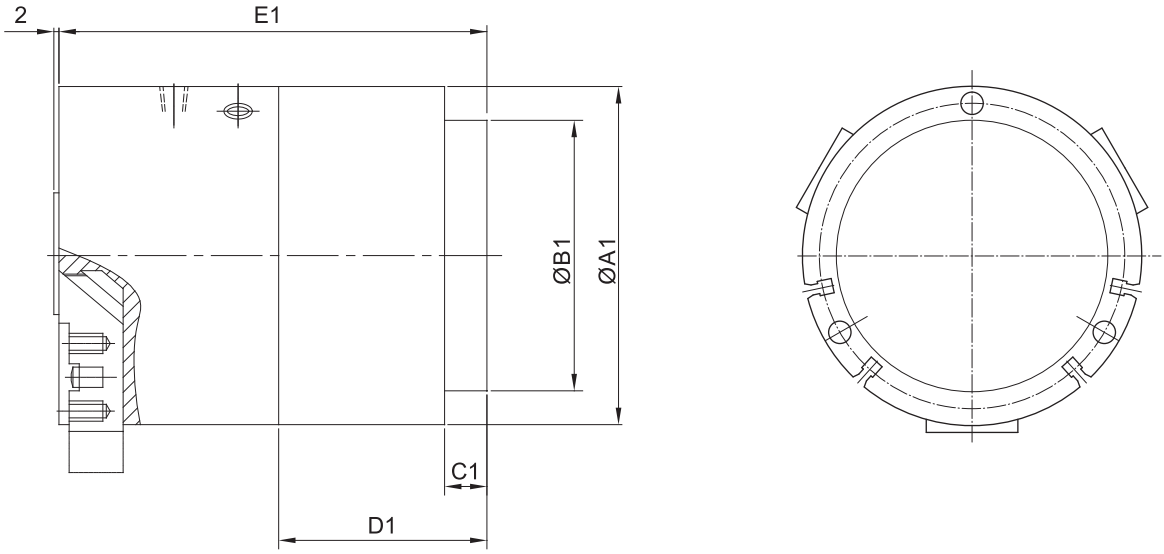

Model	A1	B1	C1	D1	E1
CG-50OS	50	–	–	19.2	58.2
CG-64OS	64	45	5	25	72.6
CG-80OS	80	58	5	30.2	87
CG-100OS	100	77	5	32.5	97.5
CG-125OS	125	97	5	37	113
CG-160OS	160	128	5	46	140

Application exampls

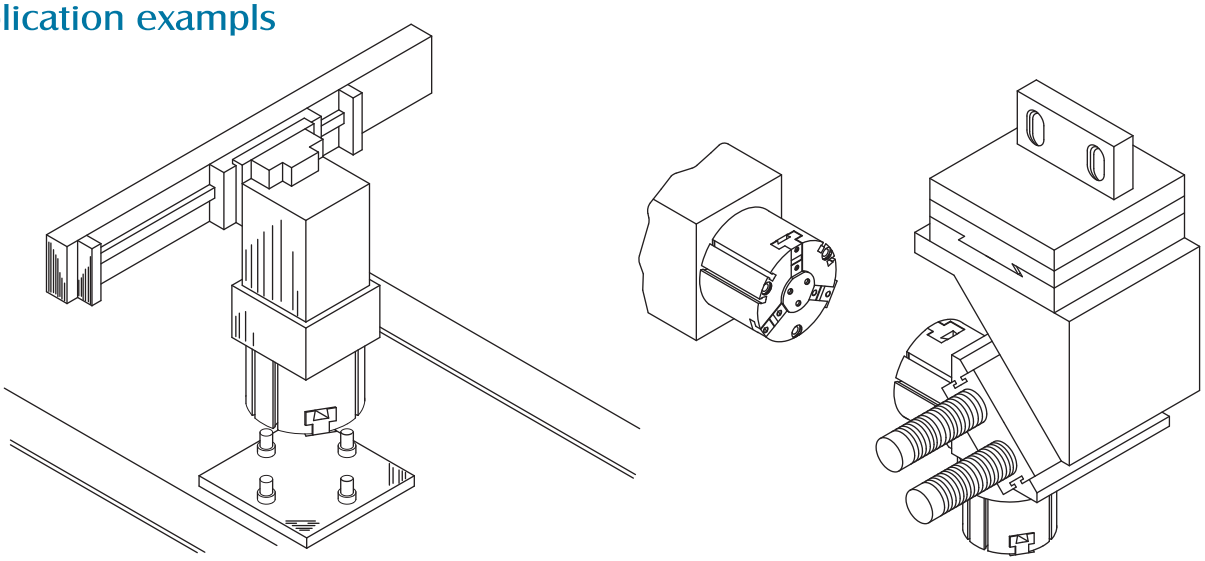

Finger blanks

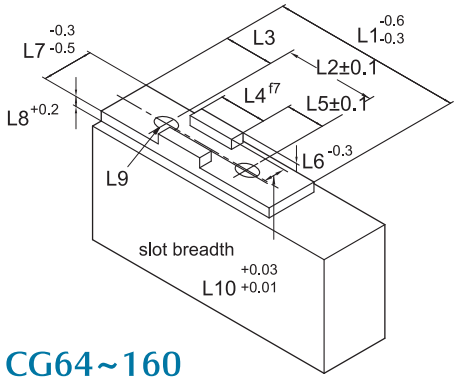

CG64~160

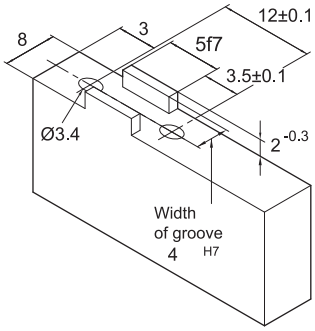

CG50

Model	L1	L2	L3	L4	L5	L6	L7	L8	L9	L10
CG-50	-	12	3	5	3.5	2	8	-	Ø 3.4	4
CG-64	20	13	4	5	4	2.5	10.2	4.5	Ø 4.5	4
CG-80	25	16	5	6	5	3	12.2	5.5	Ø 5.5	5
CG-100	32	20	6	8	6	3	14.2	5.5	Ø 6.6	6
CG-125	40	24	8.5	8	8	3.5	16.2	5.5	Ø 6.6	6
CG-160	50	32	9	10	11	4	20.2	6.5	Ø 9	8
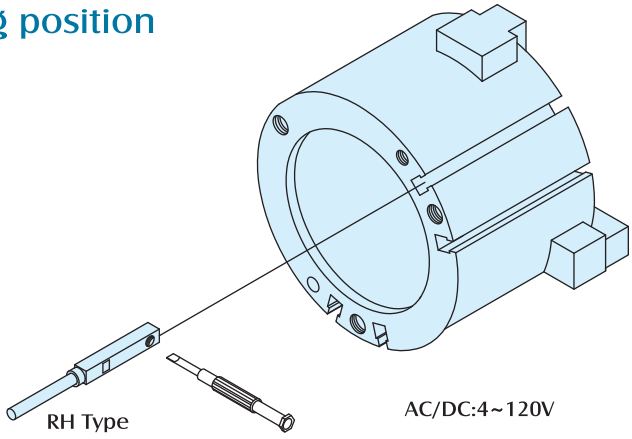
Auto switch setting position