※ Finger motion synchronization by a rack and pinion mechanism.
※ The double piston construction materializes a compact parallel grippers with great hotding force and wide range strokes.
※ All shafts are equipped with two-point support type self-Lubricated bearings.
※ The Dust seals are contained for protecting the rods thresholds from dust.

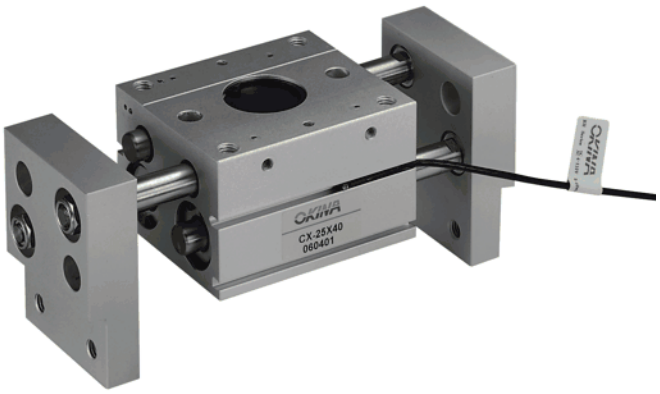

How to order

CX-16-30 -RK -1

- CX-16 — Type
- 30 — Stroke
- -RK — Auto switch type
- -1 — Number of auto switch

Auto switch type

In-line	Style
RK	Reed swicth
RKN	NPN
RKP	PNP

(Refer to P.77 for detailed auto switch specifications)

Specifications

Model	CX-10	CX-16	CX-20	CX-25	CX-32
Opening / Closing stroke (both sides)	20, 40, 60	30, 60, 80	40, 80, 100	50, 100, 120	70, 120, 160
Cylinder bore (mm)	10	16	20	25	32
Fluid	Air				
Operating pressure MPa	0.2~0.6 (2.0~6.1 kgf / cm^2)				
Operating temperature °C	-10°C~60°C				
Repeatability(mm)	±0.1				
Lubrication	Non-Lube				
Action	Double acting				

* Maintenance: Re-Lubrication after appr. 1.5 million cycles recommended

Weights

Model	CX-10			CX-16			CX-20			CX-25			CX-32		
Opening/closeing stroke(both sides)	20	40	60	30	60	80	40	80	100	50	100	120	70	120	160
Weight(kg)	0.28	0.35	0.43	0.62	0.8	0.94	1.03	1.5	1.69	1.69	2.8	3.0	3.15	4.36	5.4

Effective Holding Force

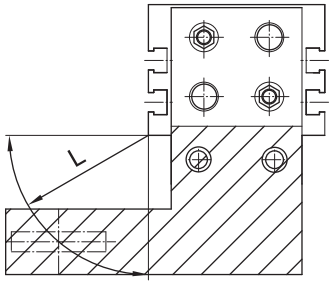

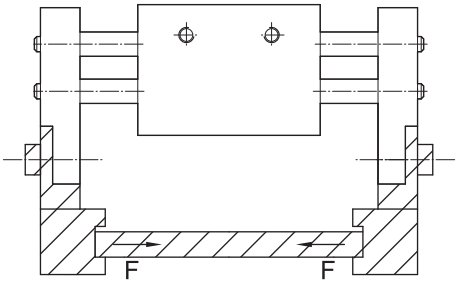

CX-10 ST-20 CX-10x20weight 0.28kg

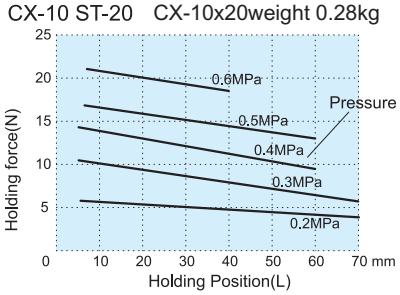

CX-10x40weight 0.345kg
CX-10 ST-40~60 CX-10x60weight 0.425kg

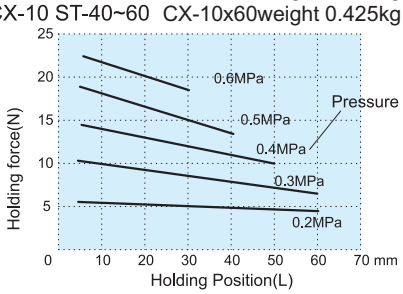

CX-16 ST-30 CX-16x30weight 0.62kg

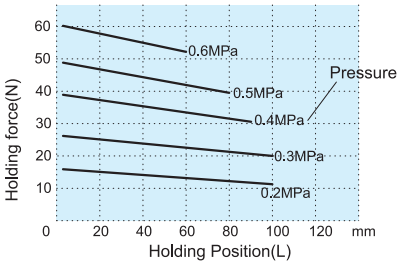

CX-16x60weight 0.8kg
CX-16 ST-60~80 CX-16x80weight 0.94kg

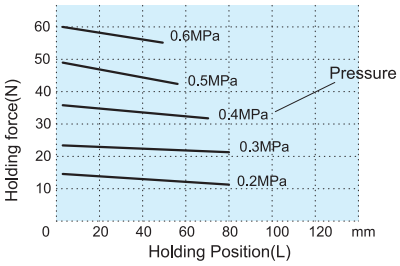

CX-20 ST-40 CX-20x40weight 1.03kg

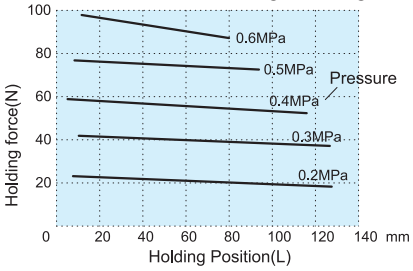

CX-20x80weight 1.5kg
CX-20 ST-80~100 CX-20x100weight 1.69kg

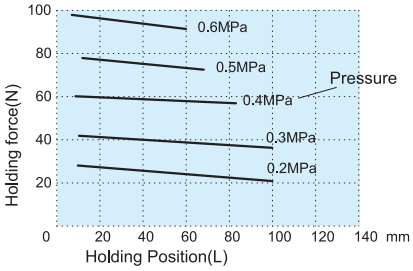

CX-25 ST-50 CX-25x50weight 1.69kg

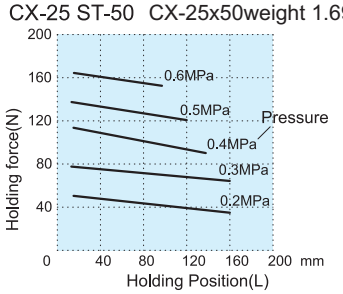

CX-25x100weight 2.8kg
CX-25 ST-100~120 CX-25x120weight 3kg

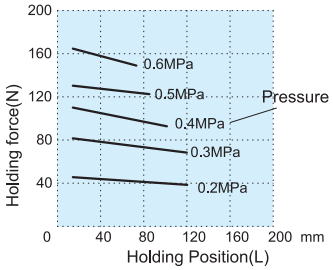

CX-32 ST-70 CX-32x70weight 3.15kg

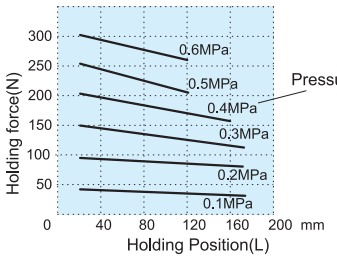

CX-32x120weight 4.36kg
CX-32 ST-120~160 CX-32x160weight 5.4kg

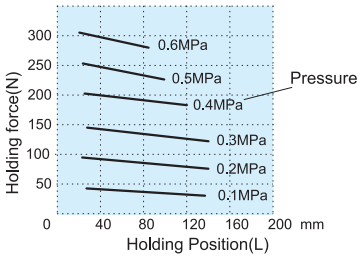

- With reference to the holding force, under the condition must be considered.
- Condition:Friction coefficient, great acceleration, impact is expected during work pice rotate.
- It recommend: select a type of arithmetic holding force that can produce 10 to 20 times for work pice weight.

Dimensions

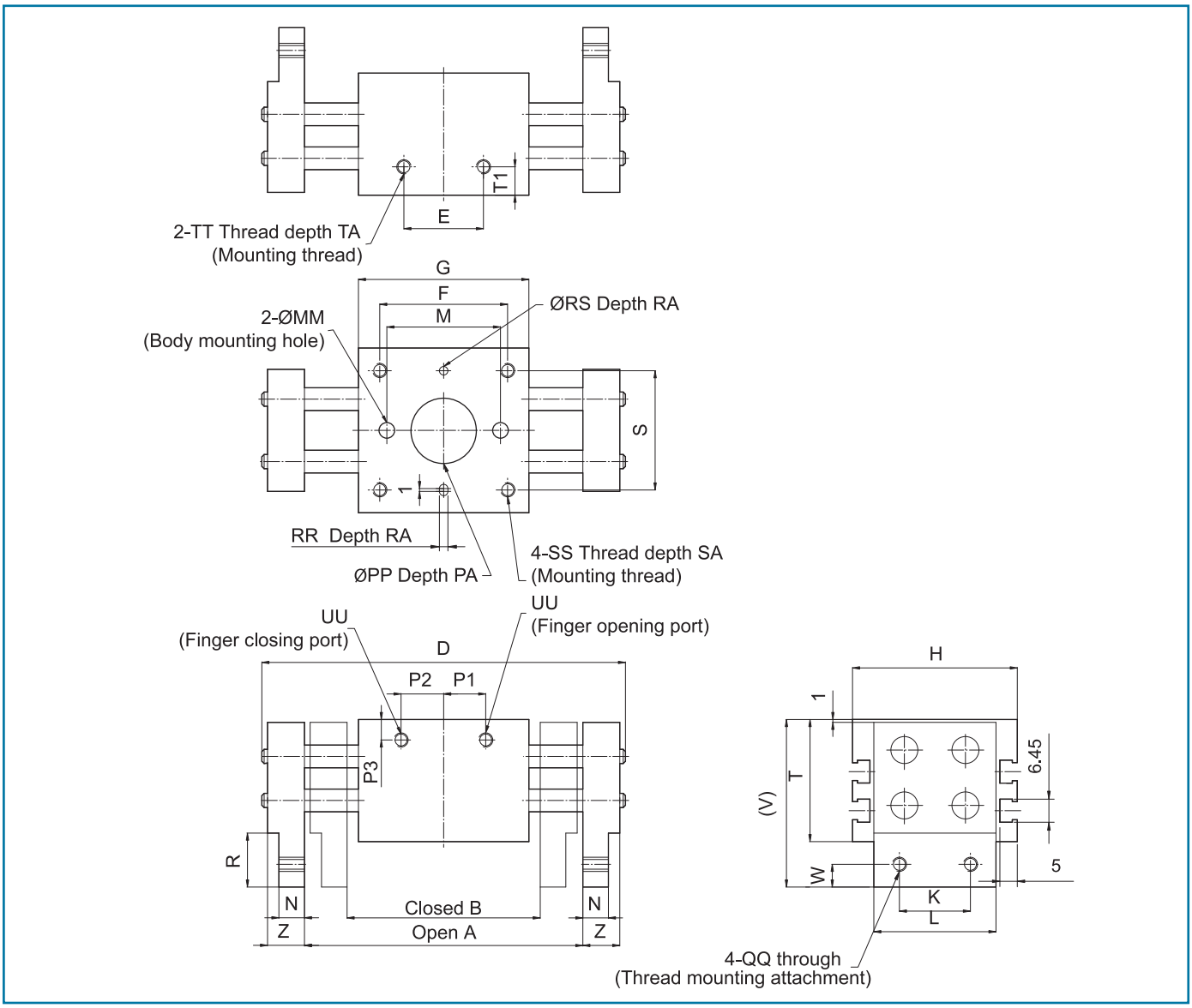

Model	stroke	A	B	D	E	F	G	M	P1	P2
CX-10	20	76	56	100	26	36	51	38	12	12
	40	118	78	142	42	52	67	54	19.5	19.5
	60	156	96	180	60	70	85	72	28.5	28.5
CX-16	30	98	68	128	28	45	60	40	14.4	14.4
	60	170	110	200	58	75	90	70	29.4	29.4
	80	210	130	240	78	95	110	90	39.4	39.4
CX-20	40	122	82	160	38	58	71	54	16.9	16.9
	80	222	142	260	80	100	113	96	34.4	34.4
	100	262	162	300	100	120	133	116	44.4	44.4
CX-25	50	150	100	196	48	70	88	66	23	23
	100	282	182	328	102	124	142	120	50	23
	120	320	200	366	120	142	160	138	59	24
CX-32	70	220	150	272	60	86	110	–	28	28
	120	318	198	370	108	134	158	–	52	52
	160	402	242	454	152	178	202	–	74	74

Model	H	K	L	N	MM	PA	PP	P3	QQ	R	RA	RR	RS	S	SA	SS	T	T1	TA	TT	UU	V	W	Z
CX-10	44	20	34	7	4.5	1.5	18	9	M4x0.7	15	3	3	3	34	8	M4x0.7	31	9	5	M4x0.7	M5x0.8	46.5	7	10
CX-16	55	25	44	9	5.5	1.5	23	10	M5x0.8	19	3	3	3	42	10	M5x0.8	40	10	7	M5x0.8	M5x0.8	59	8	13
CX-20	65	30	54	12.5	6.6	1.5	24	11	M6x1.0	24	4	4	4	52	12	M6x1.0	46	11	7	M6x1.0	M5x0.8	70	10	17
CX-25	76	40	64	14	9	1.5	32	20.5	M8x1.25	29	4	4	4	62	16	M8x1.25	53	12.5	7	M8x1.25	M5x0.8	81	12	22
CX-32	82	50	70	15	–	1.5	35	16	M10x1.5	32	8	6	6	64	16	M8x1.25	68	22	11	M8x1.25	RC(PT)1/8"	100	15	24

Mounting of air gripper

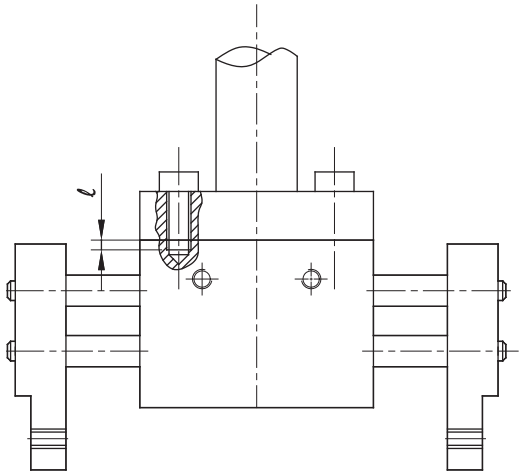

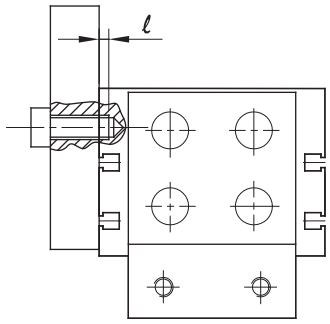

Lateral Mounting

Model	Bolt	Maximum torque N.m	Max. screw depth ℓ (mm)
CX -10	M4x0.7	2.1	5
16	M5x0.8	2.8	7
20	M6x1	4.8	7
25	M8x1.25	12.0	7
32	M8x1.25	12.0	11

Axial Side Mounting (Body Tapped)

Model	Bolt	Maximum torque N.m	Max. screw depth ℓ (mm)
CX -10	M4x0.7	2.1	8
16	M5x0.8	4.3	10
20	M6x1	7.3	12
25	M8x1.25	17.7	16
32	M8x1.25	18	16

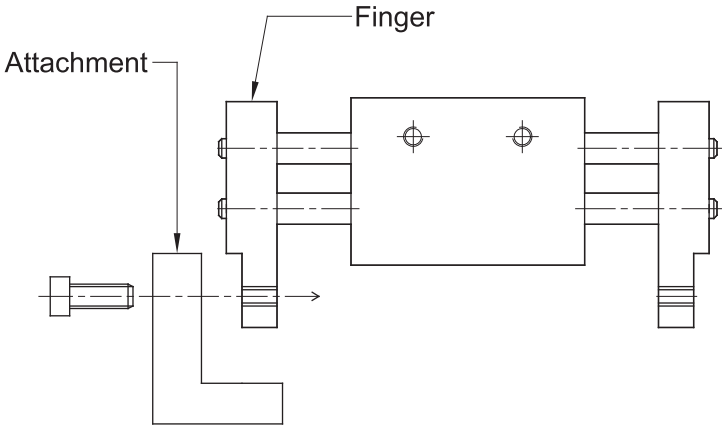

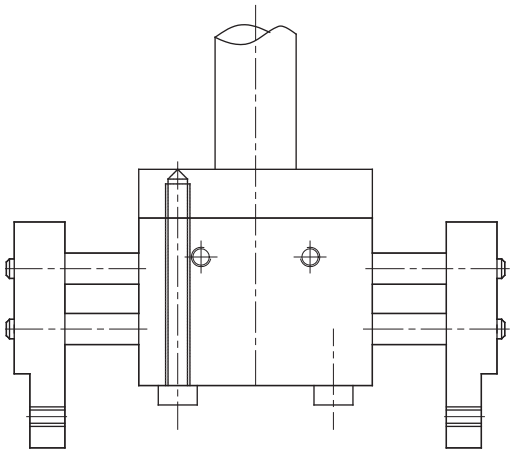

Body through hole

Model	Bolt	Maximum torque N.m
CX -10	M4x0.7	2.1
16	M5x0.8	4.3
20	M6x1	7.3
25	M8x1.25	17.7

How to Mount Attachment on fingers

1. Make sure that the piston rod is retracted so as not to apply undue strain on the piston rod while an attachment is being mounted to the finger.
2. Do not scratch or dent the sliding portion of the piston rod. Damage to the bearings or seals may cause air leaks or faulty operation.
3.Refer to the table below for the proper tighening torque of the bolts used for securing an attachment to a finger.

Model	Bolt	Maximum torque N.m
CX - 10	M4x0.7	1.4
16	M5x0.8	2.8
20	M6x1	4.8
25	M8x1.25	12.0
32	M8x1.25	24.0