※ The slide unit can be mounted on the housing.
※ It's compact design and low profile accommodate minimum space requirements to meet many design applications.

How to order

DRW S 15 50 RT 1

Bearing type

S	Slide bearing
L	Ball bushing bearing

Bore size/Stroke (mm)

Bore size	Standard strokes
10	10, 20, 30, 40, 50
15	
20	10,20,30,40,50,75,100
25	
32	

Auto switch type

Perpendicular	In-line	Style
RTV	RT	Reed switch
RTNV	RTN	NPN
RTPV	RTP	PNP

(Reft to P.79 for detailed auto switch specifications)

Number of auto switch

Specifications

Model	DRW-10	DRW-15	DRW-20	DRW-25	DRW-32
Cylinder bore (mm)	10	15	20	25	32
Fluid	Air (non-lube)				
Proof pressure (MPa)	1.05				
Maximum operating pressure (MPa)	0.7				
Minimum operating pressure (MPa)	0.15		0.1		
Ambient and fluid temperature (°C)	-10°C~60°C (with no freezing)				
Piston speed (mm/s)	50 to 500				
Cushion	Rubber bumper on both sides				
Stroke adjustable range (mm)	0 to -10 (Extended end:5mm; Retracted end:5mm				
Port size	M5x0.8			PT 1/8"	

Standard / Special Strokes

(mm)

Model	Standard strokes	Special order - Long stroke
DRW-10	10, 20, 30, 40, 50	75, 100, 125, 150
DRW-15		
DRW-20	10, 20, 30, 40, 50, 75, 100	125, 150, 175, 200
DRW-25		
DRW-32		

Theoretical Output

(N)

Model	Rod size (mm)	Piston area (mm^2)	Operating pressure (MPa)						
			0.1	0.2	0.3	0.4	0.5	0.6	0.7
DRW-10	6	100	10	20	30	40	50	60	70
DRW-15	8	252	25.2	50.4	75.6	101	126	151	176
DRW-20	10	471	47.1	94.2	141	188	236	283	330
DRW-25	12	756	75.6	151	227	302	378	454	529
DRW-32	16	1206	121	241	362	482	603	724	844

Weights

(kg)

Model		Standard strokes (mm)						
		10	20	30	40	50	75	100
DRW-10	S	0.19	0.20	0.22	0.23	0.25	0.28	–
	L	0.20	0.21	0.23	0.24	0.26	0.29	–
DRW-15	S	0.38	0.40	0.43	0.46	0.49	0.56	0.63
	L	0.42	0.44	0.47	0.50	0.53	0.60	0.67
DRW-20	S	0.66	0.69	0.73	0.77	0.81	0.91	1.01
	L	0.70	0.74	0.77	0.81	0.85	0.95	1.05
DRW-25	S	1.01	1.06	1.12	1.17	1.23	1.36	1.48
	L	1.02	1.07	1.13	1.18	1.24	1.37	1.49
DRW-32	S	1.91	1.99	2.08	2.16	2.25	2.46	2.68
	L	1.93	2.02	2.10	2.18	2.27	2.48	2.70

Maximum load weight

If the cylinder is mounted as shown in the diagrams below, the maximum load weight W should not exceed the values illustrated in the graph immediately following the diagrams.

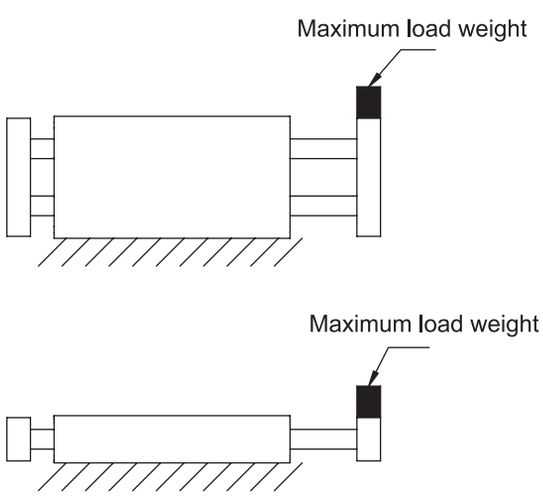

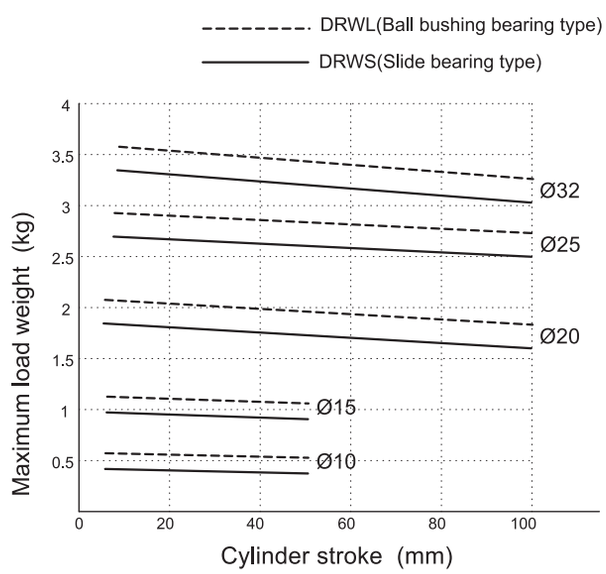

Non-rotating accuracy

Non-rotating accuracy θ° without a load should be less than or equal to the value provided in the table below as a guide.

Bore size (mm)	10 to 32
DRWS (Slide bearing)	± 0.1°
DRWL (Ball bushing bearing)	

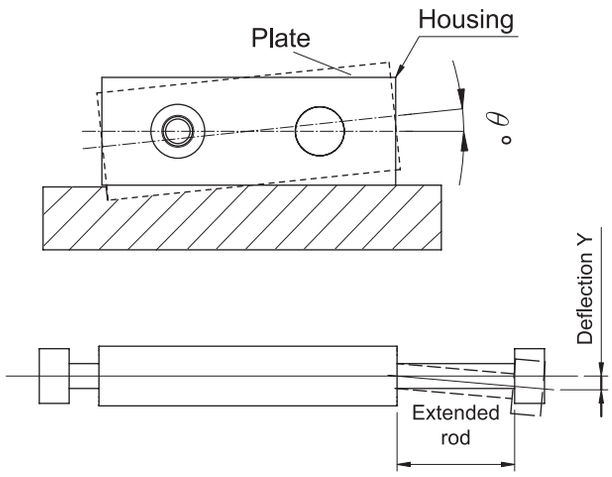

Deflection at the plate end

An approximate plate-end deflection Y without a load is shown in the graph below

Bore size (mm)	10 to 32
DRWS (Slide bearing)	± 0.03mm
DRWL (Ball bushing bearing)	

Allowable kinetic energy

For vertical mounted cylinder with a load weight and cylinder speed not exceeding the ranges shown in the graph below.

Cylinder speed should be adjusted using a speed controller.

Also for horizontally mounted cylinder should also be operated with a load weight less than the ranges given in the graph at left.

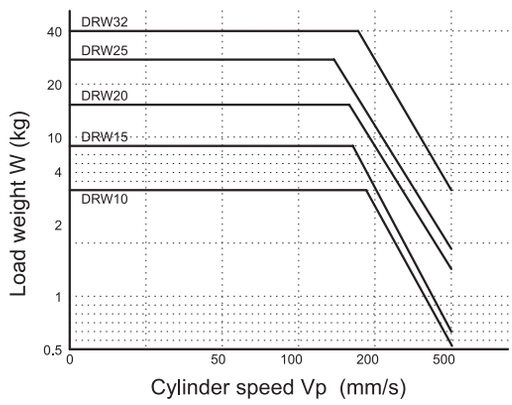

DRW-10

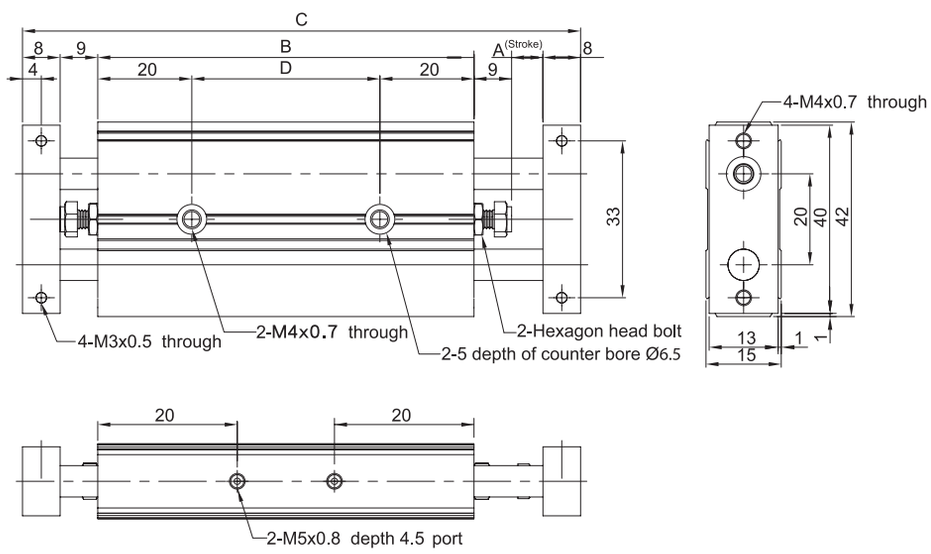

Stroke	10	20	30	40	50	75	100	125	150
A	10	20	30	40	50	75	100	125	150
B	92	102	112	122	132	157	182	207	232
C	136	156	176	196	216	266	316	366	419
D	52	62	72	82	92	117	142	167	192

DRW-15

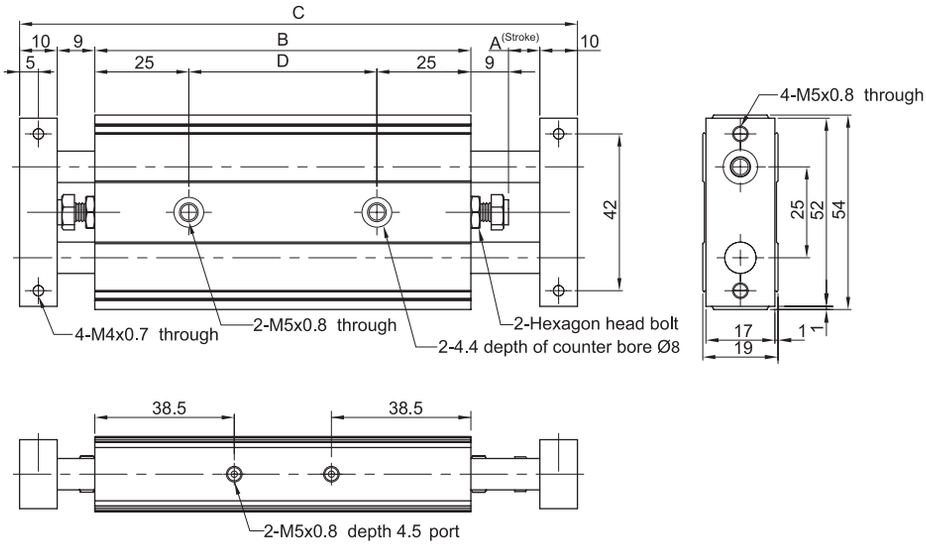

Stroke	10	20	30	40	50	75	100	125	150
A	10	20	30	40	50	75	100	125	150
B	105	115	125	135	145	170	195	220	245
C	153	173	193	213	233	283	333	383	433
D	55	65	75	85	95	120	145	170	195

DRW-20

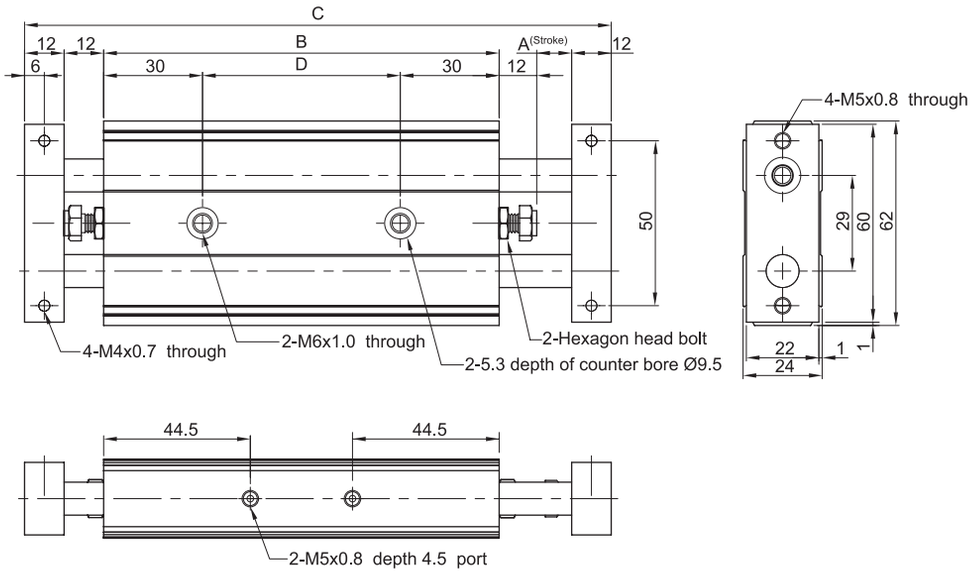

Stroke	10	20	30	40	50	75	100	125	150	175	200
A	10	20	30	40	50	75	100	125	150	175	200
B	120	130	140	150	160	185	210	235	260	285	310
C	178	198	218	238	258	308	358	408	458	508	558
D	60	70	80	90	100	125	150	175	200	225	250

DRW-25

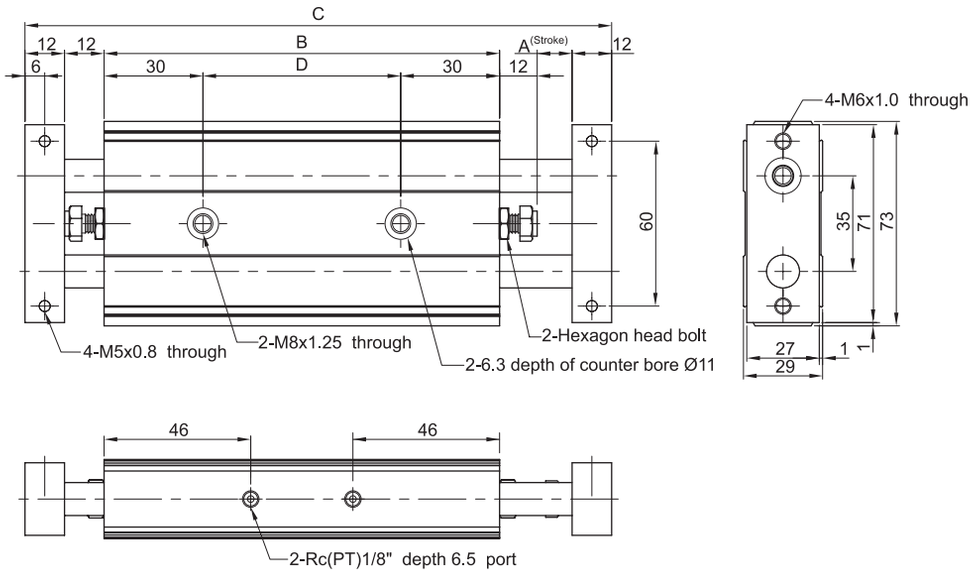

Stroke	10	20	30	40	50	75	100	125	150	175	200
A	10	20	30	40	50	75	100	125	150	175	200
B	122	132	142	152	162	187	212	237	262	287	312
C	180	200	220	240	260	310	360	410	460	510	560
D	62	72	82	92	102	127	152	177	202	227	252

DRW-32

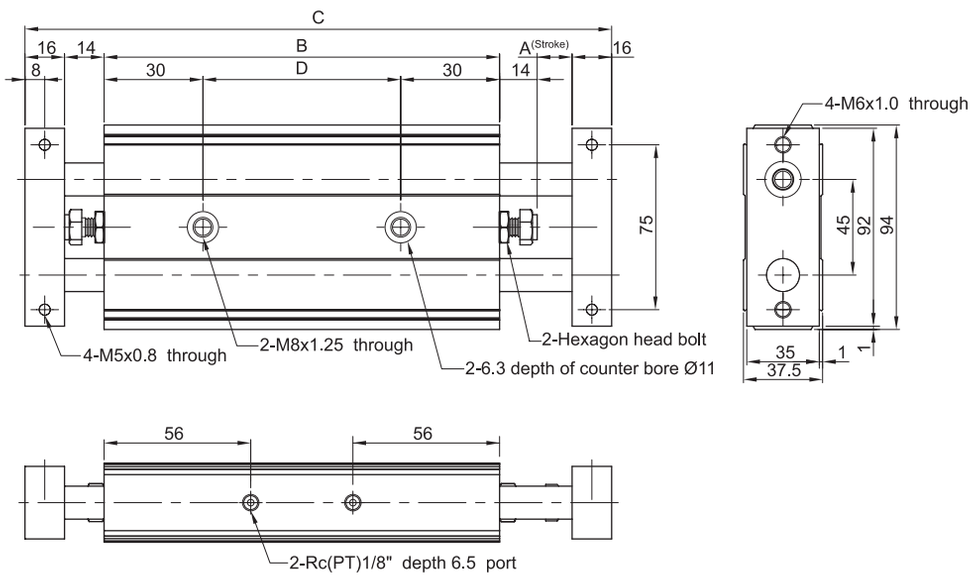

Stroke	10	20	30	40	50	75	100	125	150	175	200
A	10	20	30	40	50	75	100	125	150	175	200
B	143	153	163	173	183	208	233	258	283	308	333
C	213	233	253	273	293	343	393	443	493	543	593
D	83	93	103	113	123	148	173	198	223	248	273