- ※ Warranty : 24 months for seal.
- ※ Auto-lubrication, clean room, high-temperature are optionally available.
- ※ Interchangeable with SCHUNK.
- ※ Auto-lubrication function fit ones without using dust cover for coolant splashing, dust proof, drip proof, and environmental resistant.
- ※ Pneumatic supply via hose-free direct connection.
- ※ Gripping force safe device.
- ※ The housing : high-tensile aluminium and special hard-coated.

Gripper jaws fit for discontinued

How to order

CGZ - 50 - OS P L C T D RT 1

- OS: Mechanical gripping force safety device for O.D.gripping,even with a drop in presure
- P: Spring-loaded pressure plate
- L: Auto-lubrication
- C: Cleanroom
- T: High-temperature
- D: Gripper jaws fit for discontinued CG series Refer to P.4
- RT: Auto switch type
- 1: Number of auto switch

Perpendicular	In-line	Style
RTV	RT	Reed switch
RTNV	RTN	NPN
RTPV	RTP	PNP

Refer to P.8 for detailed auto switch specifications

Model	CGZ-50	CGZ-64	CGZ-80	CGZ-100	CGZ-125	CGZ-160	CGZ-200
Opening / Closing stroke mm (dia)	4	6	8	10	13	16	25
Fluid	Air						
Operating pressure MPa (psi)	0.2~0.8(2.0 to 8.2)						
Ambient and fluid temperature ˚C(˚F)	-10~60(14 to 140)						
Repeatability (mm)	0.05						
Lubrication	No Lubrication						
Action	Double acting						
Cleanroom class ISO 14644-1	5						
High-temperature	140˚C						
Weight (kg)	0.31	0.49	0.88	1.68	2.91	6.8	13.35

* Maintenance:Re-Lubrication after appr. 1.5 million cycles recommended

okina

CGZ- 50 ~200

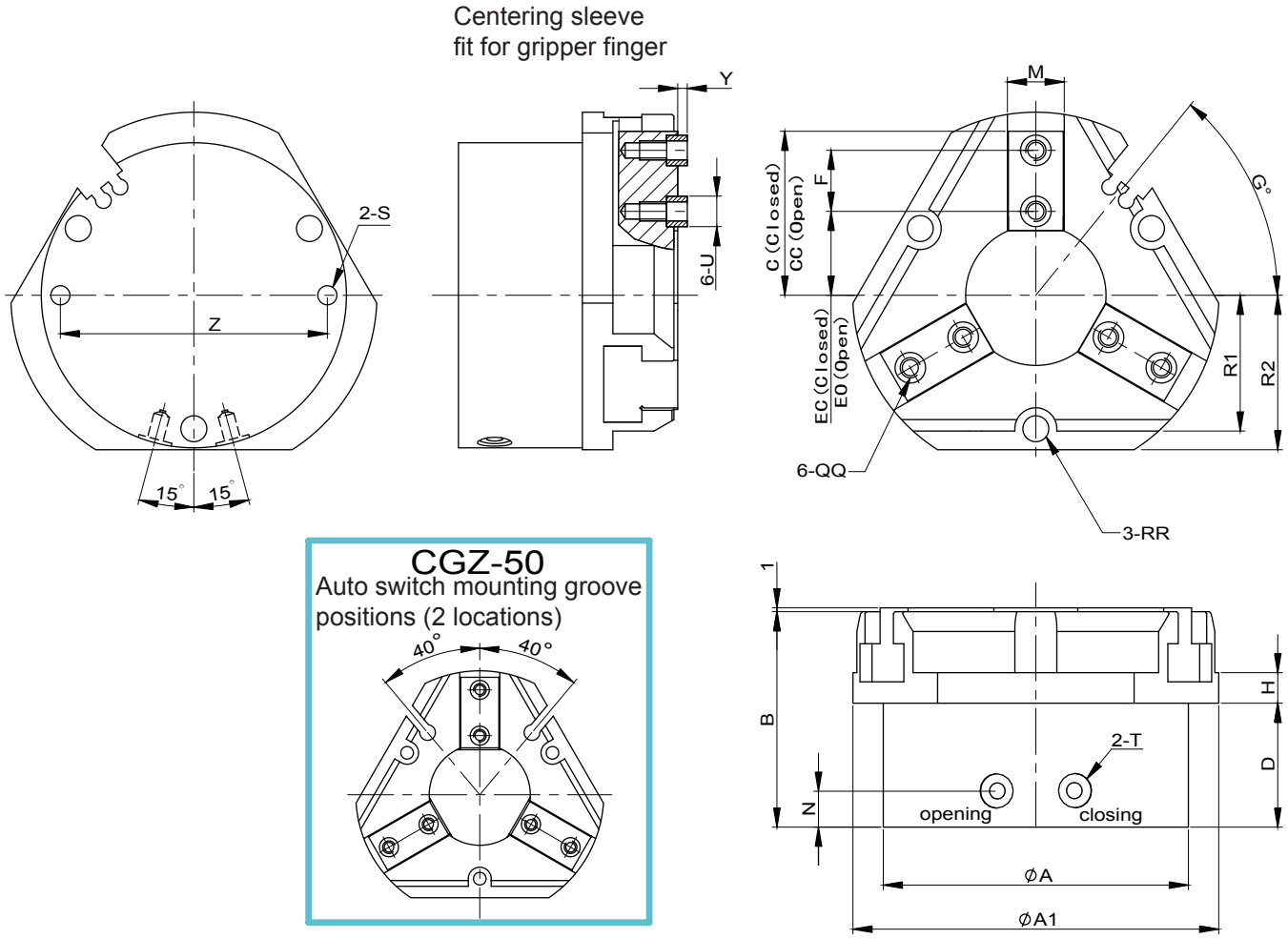

Model	A	A1	B	C	CC	D	EC	EO	F	G	H	M	N
CGZ-50	50	65	39	30.8	34.8	22	15.5	19.5	12	40	6	10	8
CGZ-64	64	76	47.5	34.5	40.5	27.5	17.5	23.5	13	54	6	12	10
CGZ-80	80	96	56.5	43	51	33.5	22	30	16	51	7	15	10
CGZ-100	100	120	65	53.5	63.5	33	27.5	37.5	20	48	13	18	12
CGZ-125	125	150	76	66.5	79.5	37.5	35	48	24	48	16.5	20	13.5
CGZ-160	160	190	95	86	102	51.5	45	61	32	48	16.5	26	14.5
CGZ-200	200	250	98.4	102.5	127.5	45	49	74	40	46	23.5	34	13.5

Model	QQ	RR	R1	R2	S	T	U	Y	Z
CGZ-50	M3DP7	ø3.4,Thru, ø7 C/B DP11 P.C.D44	24	27	ø3DP8	M5	ø5	2	45
CGZ-64	M4DP8	ø5.5, Thru, ø10 C/B DP14 P.C.D56	28.5	32.5	ø4DP10	M5	ø6	2.5	56
CGZ-80	M5DP9	ø6.4, Thru, ø11 C/B DP16 P.C.D70	35.5	40.5	ø5DP10	M5	ø8	2.5	70
CGZ-100	M6DP12	ø6.6, Thru, ø11 C/B DP19 P.C.D90	45	50.5	ø5DP12	G 1/8"	ø10	3	90
CGZ-125	M6DP12	ø8.5, Thru, ø15 C/B DP22 P.C.D112	56	63	ø6DP16	G 1/8"	ø10	3	112
CGZ-160	M10DP17	ø8.5, Thru, ø15 C/B DP27 P.C.D146	73	83.5	ø6DP20	G 1/8"	ø14	4	146
CGZ-200	M12DP17	ø10, Thru, ø18 C/B DP30 P.C.D184	95	105	ø8DP25	G 1/8"	ø16	4	184

Gripping force in relation to the holding position "L" at 6 kgf/cm2

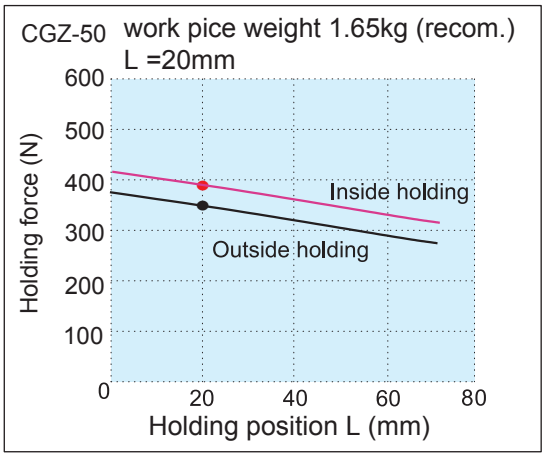

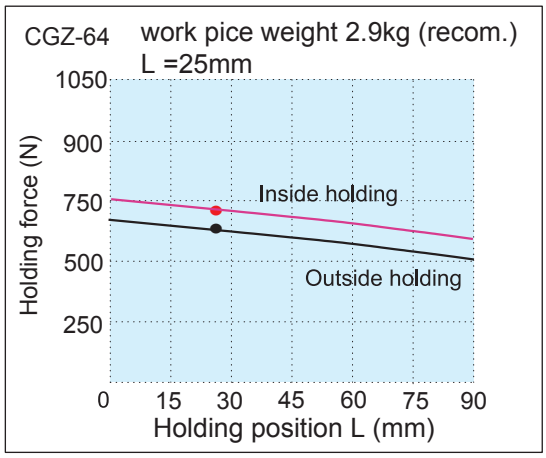

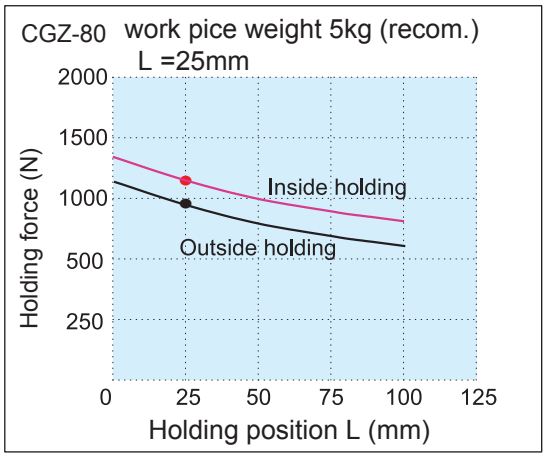

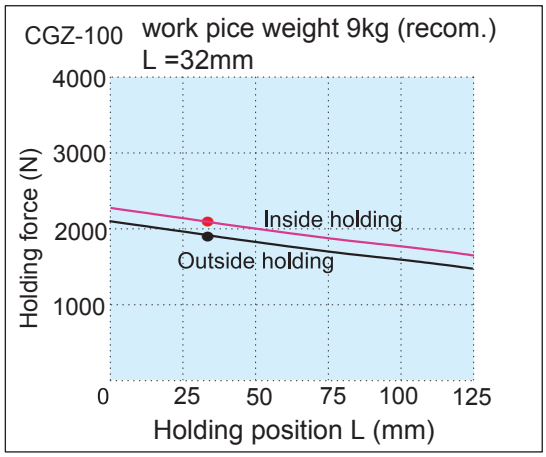

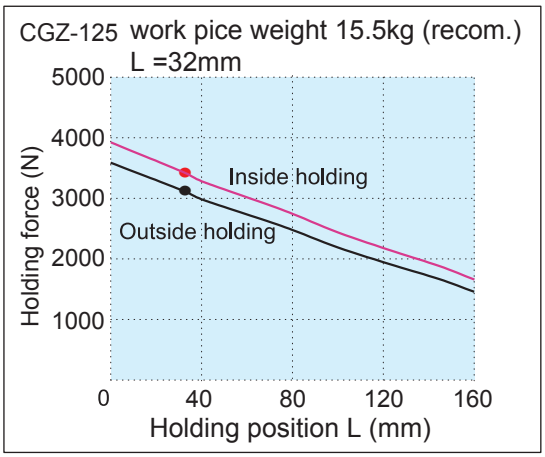

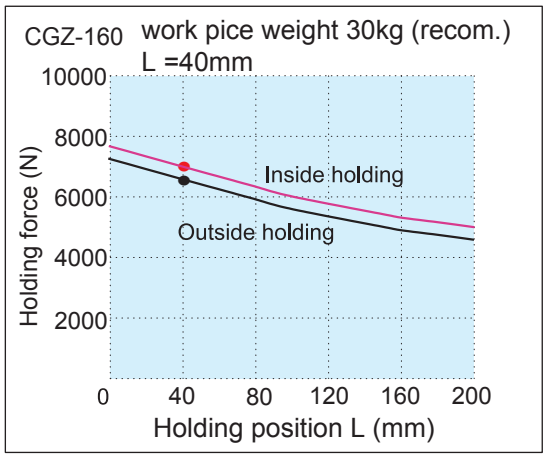

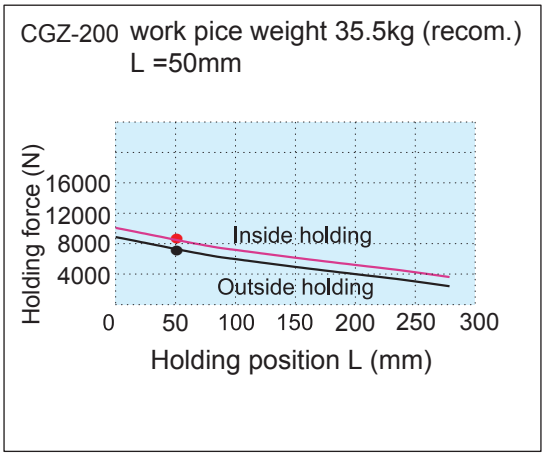

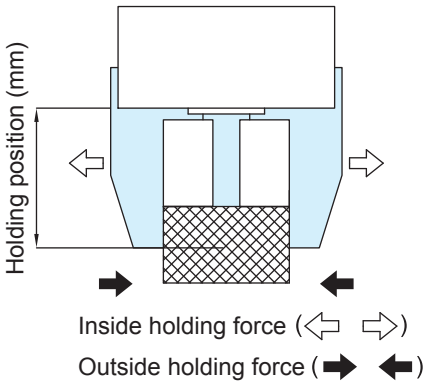

* It recommend:select a type of arithmetic holding force that can produce 10 to 20 times for work pice weight.
* Condition:Friction coefficient,great acceleration impact is expected during work pice rotate.

Finger moment

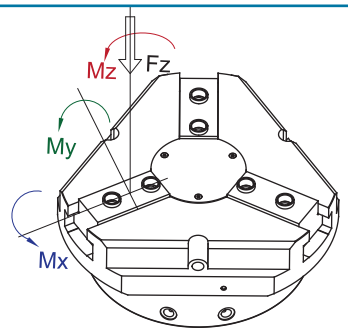

Model	CGZ-50	CGZ-64	CGZ-80	CGZ-100	CGZ-125	CGZ-160	CGZ-200
Mx(Nm)	18	36	54	72.5	107.5	153	178
My(Nm)	22.5	54	85.5	103.5	130	162.5	198
Mz(Nm)	94	36	49.5	62.5	90	117.5	138
Fz(N)	450	990	1350	1800	2520	3870	4998

Gripper jaws fit for discontinued CG series (D)

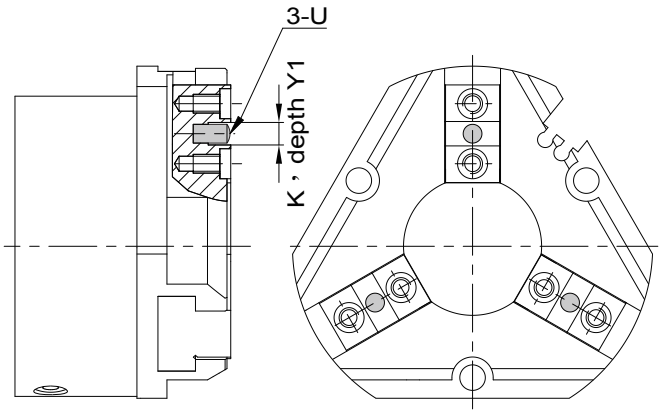

Model	CGZ-50	CGZ-64	CGZ-80	CGZ-100	CGZ-125	CGZ-160
U	ø4	ø4	ø5	ø6	ø6	ø8
K	5	5	6	8	8	10
Y1	2	2.5	3	3	3.5	4

Spring-loaded pressure plate (P)

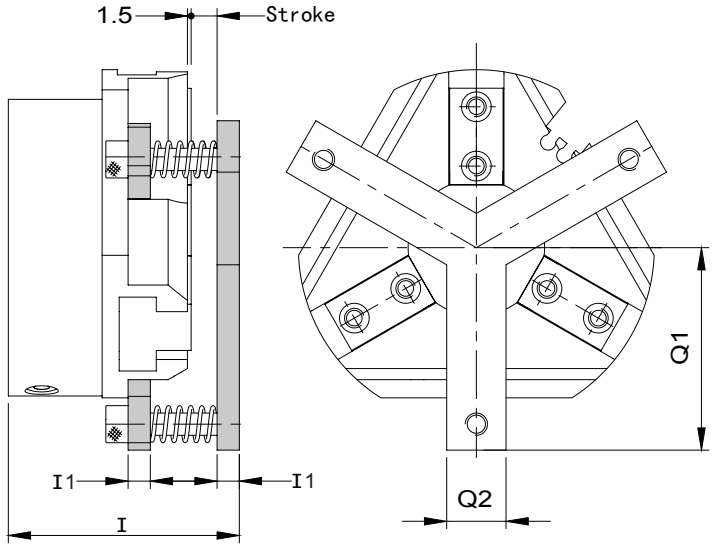

Model	CGZ-50	CGZ-64	CGZ-80	CGZ-100	CGZ-125	CGZ-160	CGZ-200
I	48.5	58	67	77.5	89.5	107.5	115.9
I1	5	5	5	6	6	8	10
Q1	41	52	60	75	100	115	130
Q2	12	14	14	20	20	25	40
Stroke	3	4	4	5	6	6	6

Hose-free direct connection

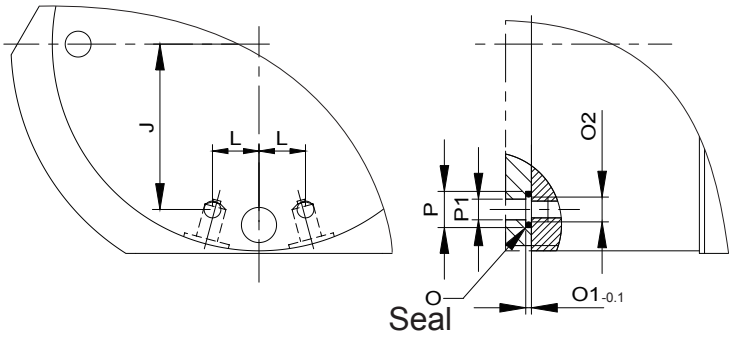

Model	CGZ-50	CGZ-64	CGZ-80	CGZ-100	CGZ-125	CGZ-160	CGZ-200
J	18.5	25	33.5	42	53	70.5	87.5
L	7.5	9	9	12	15	19	23
O	ø3x1	ø4x1.5	ø4x1.5	ø4x1.5	ø4x1.5	ø4x1.5	ø4x1.5
O1	0.6	1.1	1.1	1.1	1.1	1.1	1.1
O2	M3	M3	M3	M4	M5	M5	M5
P	ø5	ø7	ø7	ø7	ø7	ø7	ø7
P1	ø3	ø4	ø4	ø4	ø4	ø4	ø4

ⓘAuto-lubrication series(L)/Clean series(C)

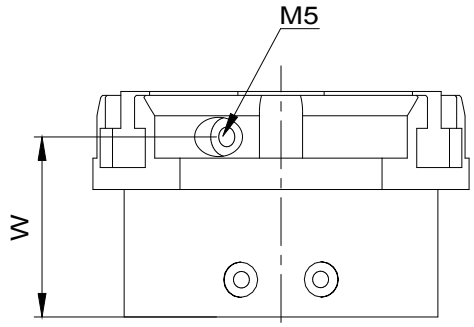

ⓘAuto-lubrication function control by lubrication equipment, fit ones without using dust cover

ⓘAuto-lubrication and Clean Series of dimension same, order no. different

Model	CGZ-50	CGZ-64	CGZ-80	CGZ-100	CGZ-125	CGZ-160	CGZ-200
W	45	46	46	47	49	50	53

CGZ-OS Gripping force safety device for O.D gripping,even with a drop in preasure.

CGZ-50OS~200OS

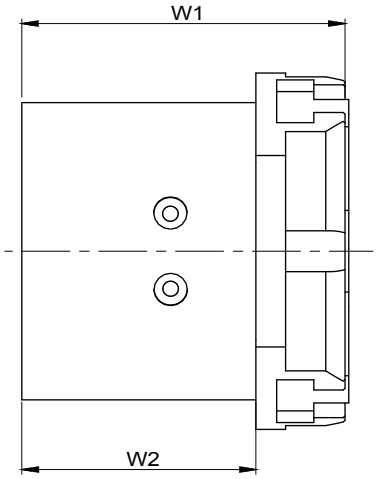

Refer to P.6 for gripping force

Model	CGZ-50OS	CGZ-64OS	CGZ-80OS	CGZ-100OS	CGZ-125OS	CGZ-160OS	CGZ-200OS
W1	58.2	72.6	87	97.5	113	140	145
W2	41.2	52.6	64	65.5	74.5	96.5	91.6

Auto switch setting position

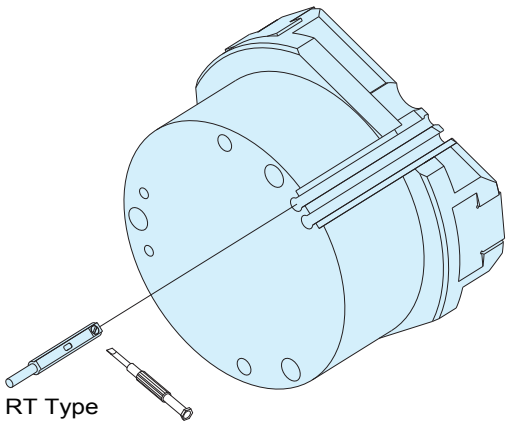

The drawing shows the finger blanks which can be produced by the customer.

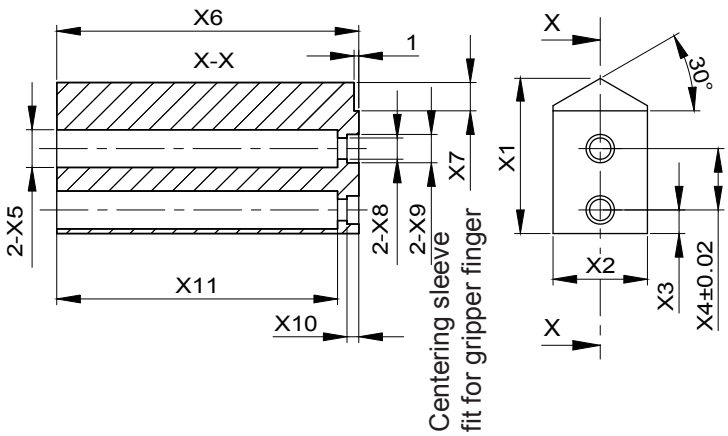

Model	X1	X2	X3	X4	X5	X6
CGZ-50	30	15	5	12	Ø6	50
CGZ-64	32	20	5	13	Ø8	64
CGZ-80	41	25	6	16	Ø10	80
CGZ-100	51	30	7	20	Ø11	100
CGZ-125	60	35	9.5	24	Ø11	125
CGZ-160	80	40	10	32	Ø18	160
CGZ-200	96	45	15	40	Ø20	200

Model	X7	X8	X9	X10	X11
CGZ-50	6	Ø3.4	Ø5	2	45.5
CGZ-64	6	Ø4.5	Ø6	2.5	59.5
CGZ-80	6	Ø5.5	Ø8	2.5	74.5
CGZ-100	11.5	Ø6.6	Ø10	3	94.5
CGZ-125	10	Ø6.6	Ø10	3	119.5
CGZ-160	20	Ø11	Ø14	4	151
CGZ-200	21	Ø13.5	Ø16	4	186

Gripping force in relation to the holding position "L" at 6 kgf/cm2

CGZ-50OS work pice weight 1.65kg (recom.)
L =20mm

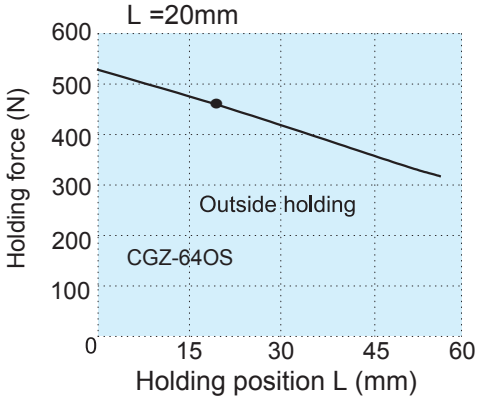

CGZ-64OS work pice weight 2.9kg (recom.)
L =25mm

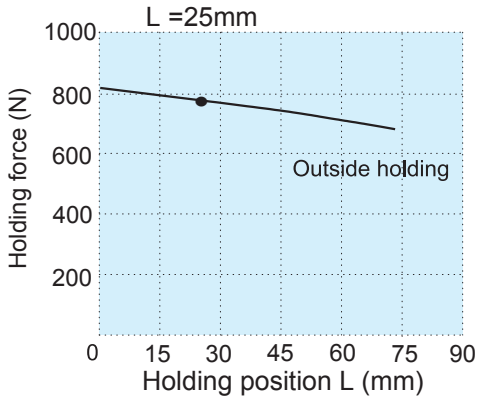

CGZ-80OS work pice weight 5kg (recom.)
L =25mm

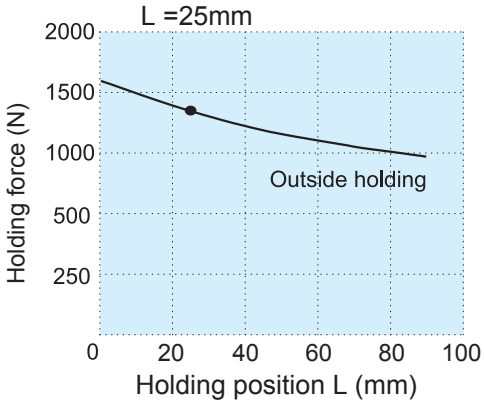

CGZ-100OS work pice weight 9kg (recom.)
L =32mm

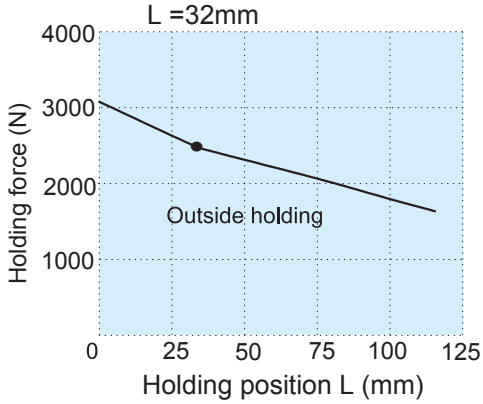

CGZ-125OS work pice weight 15.5kg (recom.)
L =32mm

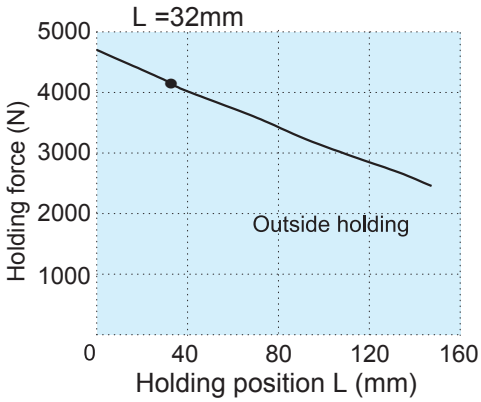

CGZ-160OS work pice weight 30kg (recom.)
L =40mm

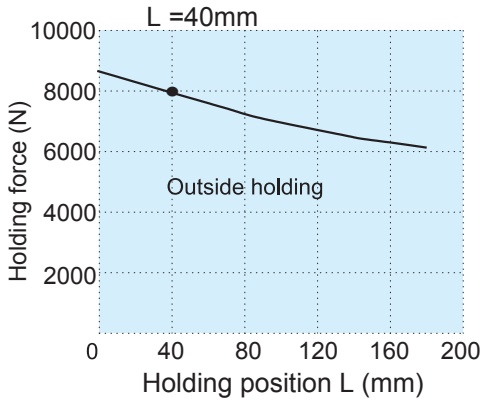

CGZ-200OS work pice weight 35.5kg (recom.)
L =50mm

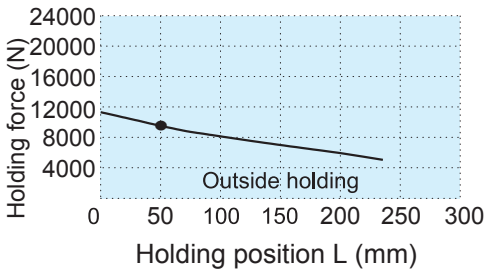

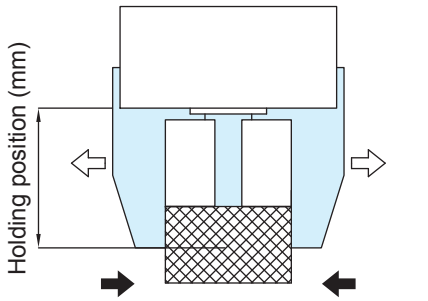

Inside holding force (⇦ ⇨)
Outside holding force (➡ ⬅)

* It recommend:select a type of arithmetic holding force that can produce 10 to 20 times for work pice weight.
* Condition:Friction coefficient,great acceleration impact is expected during work pice rotate.

CG CGZ

Finger blanks mounting interchangeability:yes

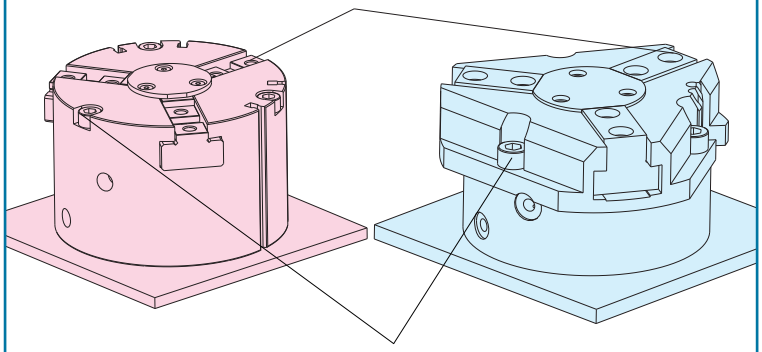

Housing mounting interchangeability:yes

CG CGZ

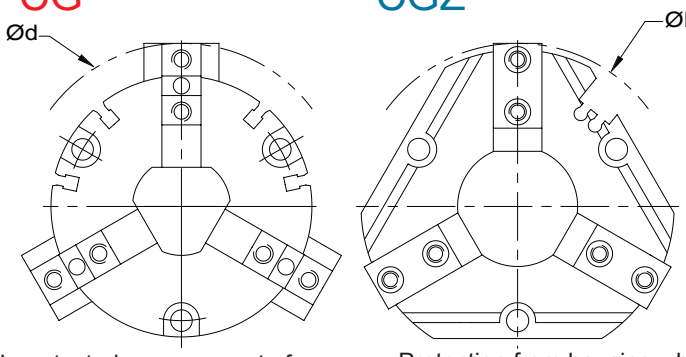

Unprotected exposure out of housing when gripper jaws open

Protection from housing when gripper jaws open

CG \ CGZ	50	64	80	100	125	160
Ød	61	76	100	124	157	202
ØD	69.6	81	102	127	159	204

How to fit discontinued CG finger blanks on CGZ gripper for maintenance

Without alter for discontinued CG finger blanks , please order option CGZ (Refer to .P4)

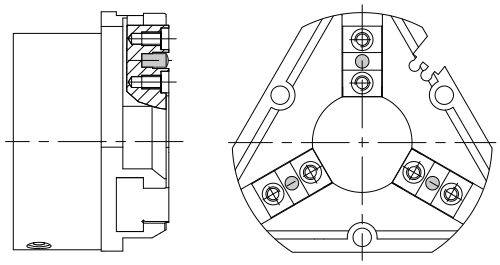

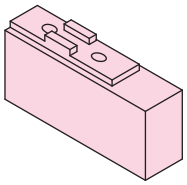

Discontinued of CG finger blanks

Alter for discontinued CG finger blanks , please order standard CGZ

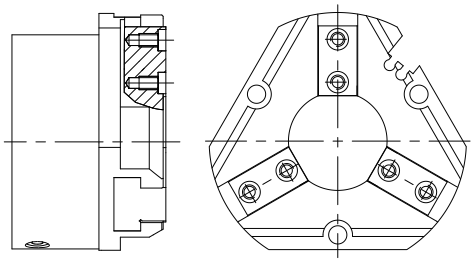

*Procedure of alter:

① ②cut two blocks ③Add two counter bore
(Refer to P.5 drawing of finger blanks)

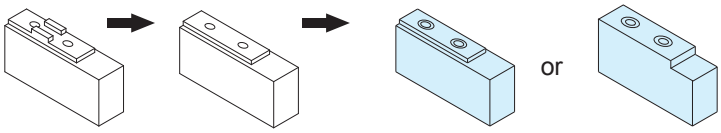

Auto switch interchangeability: No

CG

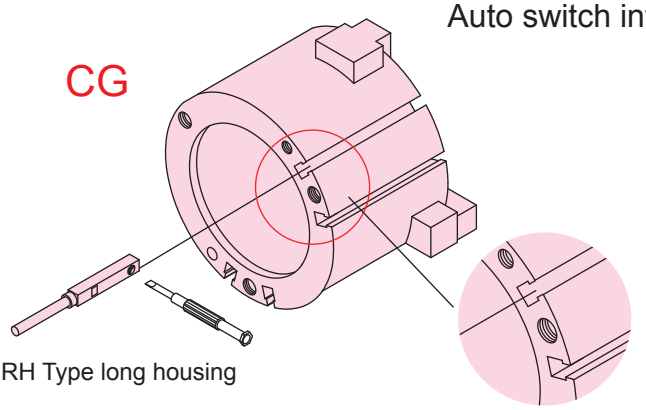

RH Type long housing

Square slot for auto switch

CGZ

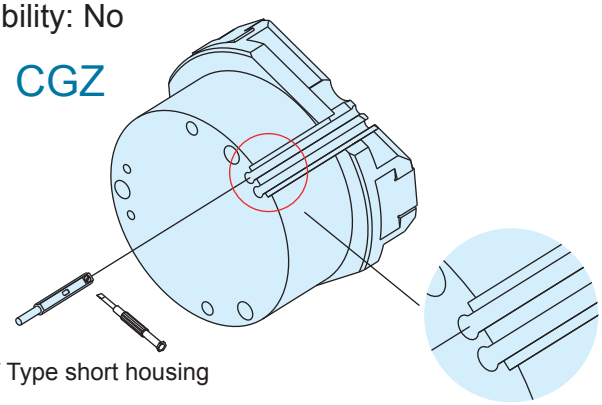

RT Type short housing

Round slot for auto switch

Applicable Type: CGZ,CGZT,CGZF,CGZH,CG2(16~25),CG2L(16~25), CQZ,CU,CKL,GRY,MRB,MRBS,MRC

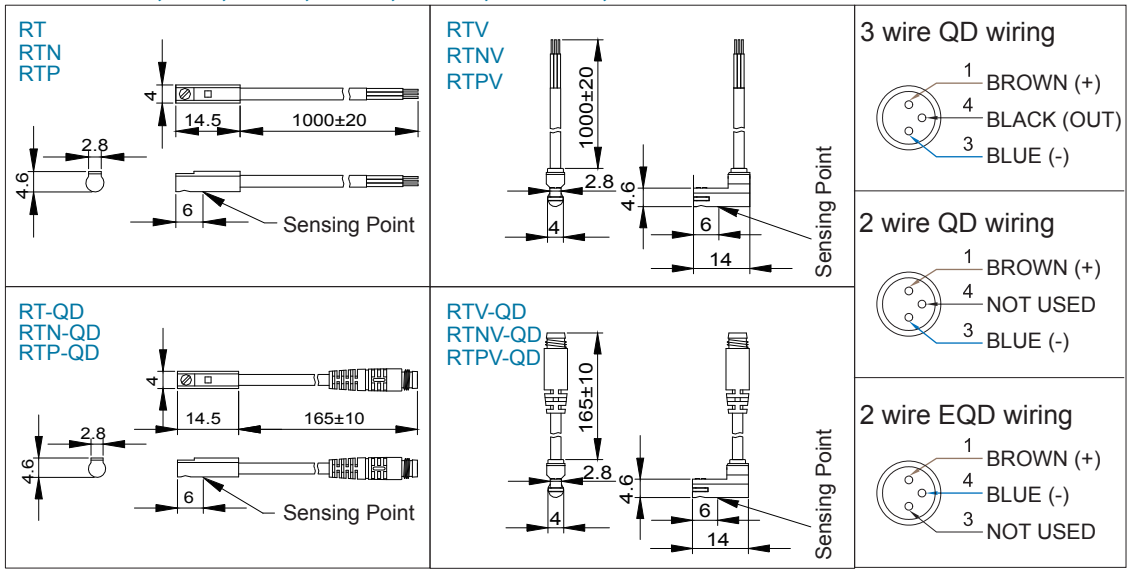

Specifications

	RT/RTV	RTN/RTNV	RTP/RTPV
Switching logic	SPST Normally Open	Solid State Output, Normally Open	
Sensor Type	Reed Switch	NPN Current Sinking	PNP Current Sourcing
Operating Voltage	5~120V DC/AC	5~28V DC	
Switching Current	4~20mA max.	50mA max.	
Switching Rating (NOTE 1.)	0.6W max.	1.5W max.	
Current Consumption	–	10mA@24 DC max.	
Voltage Drop	2.5V max.@40mA DC	0.5V@50mA max.	
Leakage Current	–	0.01mA max.	
Indicator	Red LED		Red or Green LED
Cable	2.6 Ø,2C,PVC	2.6 Ø,3C,PVC	
Max.Switch Frequency	200Hz	1000Hz	
Magnet Requirement	40Gauss		
Temperature Range	-10~70°C		
Shock (NOTE 2.)	30G	50G	
Vibration	90 m/s2 (9G), Double amplitude 1.5 mm		
Enclosure Classification	IP67		
Protection Circuit	None	Power Source Reverse polarity , Surge Suppression , Short-circuit	

NOTE:
1.WARNING:Never exceed rating (Watt=Voltage x Amperage).Permanent demage to sensor will occur.
2.Sin wave / X,Y,Z 3 directions / 3 times each direction / 11 ms each time.

Connect Diagram

RT/RTV

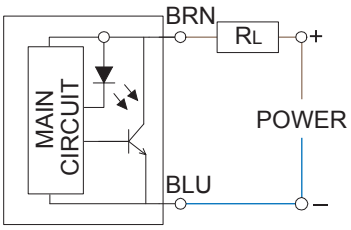

RTN/RTNV

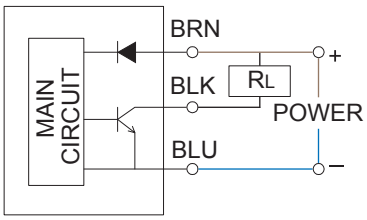
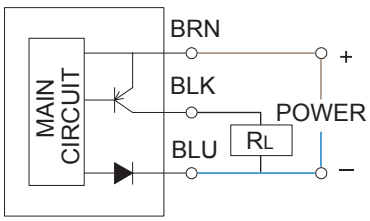
RTP/RTPV