Mini-Rotary Actuator Series MRC okina

※ Rack and pinion type/with external stoppers.
※ Mounting from 3 directions.
※ Piping and wiring are same directions.
※ The external stopper series more than without stopper series 4 to 5 times allowable kinetic energy

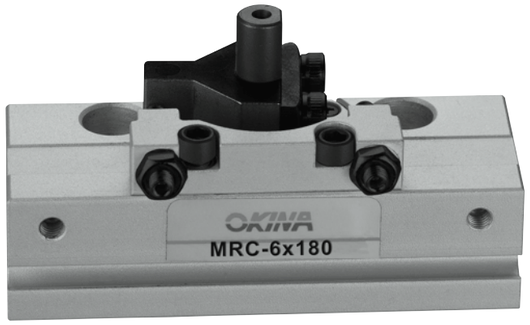

How to order

With external stopper

MRC -6 90 RT 1

- MRC: Type
- -6: Bore size (6, 8)
- 90: Rotation angle (90°, 180°)
- RT: Auto switch type
- 1: Number of auto switch

90°	90°
180°	180°

Auto switch type

Perpendicular	In-line	Style
RTV	RT	Reed switch
RTNV	RTN	NPN
RTPV	RTP	PNP

(Reft to P.79 for detailed auto switch specifications)

Specifications

Model	MRC-6		MRC-8	
	With external stopper		With external stopper	
Cylinder bore(mm)	6		8	
Fluid	Air (Non-lube)			
Max. operating pressure (MPa)	0.7 (7.1kgf/cm²)			
Min. operating pressure (MPa)	0.2 (1.5kgf/cm²)			
Ambient and fluid temperature (°C)	0°~60° (No freezing)			
Rotation	90°, 180°			
Angle adjustment range	Each rotation end ± 5°			
Port size	M3x0.5			
Weights (g)	90°	180°	90°	180°
	48	54	71	82

With external stopper/MRC

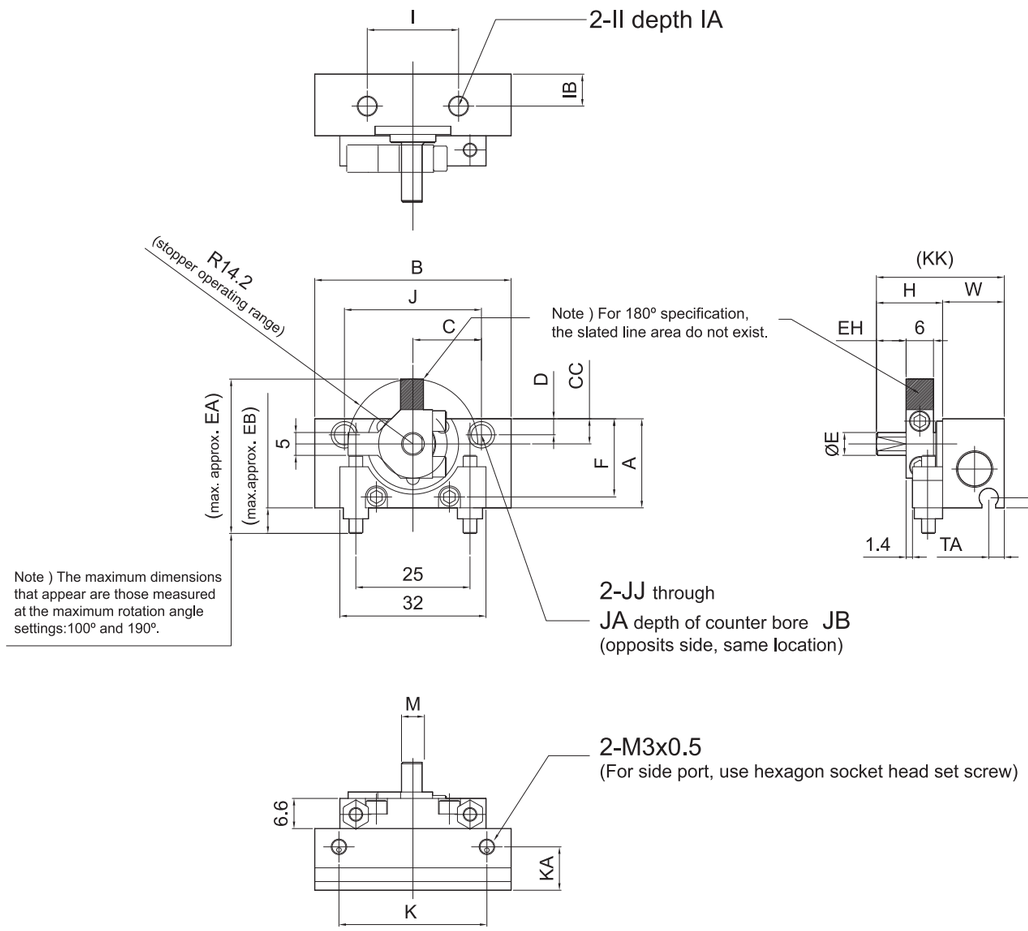

Model	Rotation angle	A	B	C	CC	D	E	F	H	I	IA	IB	II	J	JA	JB
MRC-6	90°	19.5	43	21.5	5.5	3.5	5g6	17.1	14.5	20	5	7	M4x0.7	30	5.8	3.5
	180°		54	27												
MRC-8	90°	23.5	48	24	7.5	4.5	6g6	21.1	15.5	22	6	8.5	M5x0.8	35	7.5	4.5
	180°		62	30.5												

Model	Rotation angle	JJ	K	KA	KK	M	TA	W	EA	EB	EH
MRC-6	90°	M4x0.7	32.4	9.5	28	4.5	3.4	13.5	33.8	5.6	6.5
	180°		43.4								
MRC-8	90°	M5x0.8	37.4	12.5	32	5.5	5.9	16.5	35.8	5.6	7.5
	180°		50.4								

Effective Torque

Model	Operating Pressure (MPa)						
	0.15	0.2	0.3	0.4	0.5	0.6	0.7
MRC-6	0.013	0.017	0.026	0.034	0.042	0.050	0.059
MRC-8	0.029	0.038	0.057	0.076	0.095	0.11	0.13

Note) Effective torque values are representative values . They are not guaranteed values.
Use them only as a guide.

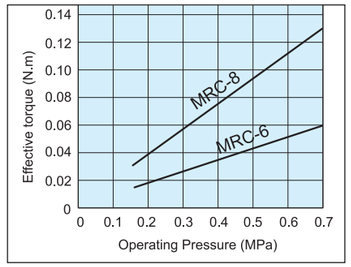

Inertial moment

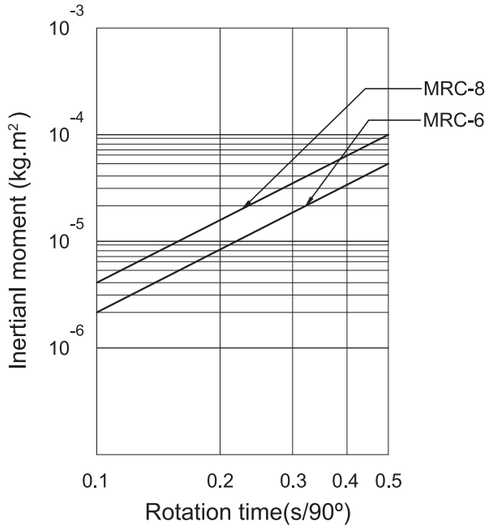

Allowable Load

Do not permit the load and moment applied to the table to exceed the allowable values shown in the table below. (Operation above the allowable values can cause advers effects on service life, such as play in the table and loss of accuracy)

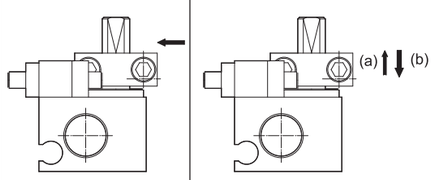

Model	Allowable radial load (N)	Allowable thrust load (N)	
		(a)	(b)
6	25	20	20
8	30	25	25

Allowable kinetic energy and rotation time adjustment range

From the table below,set the rotation time within the proper adjustment range for stable operation.Note tnat slow speed operation exceeding the rotation time adjustment range,may lead to sticking or stopping of operation.

Model	Allowable kinetic energy (mJ)	Rotation time adjustment range for stable operation s/90°
MRC-6	1.0	0.1 to 0.5
MRC-8	2.0	

Load Types

Inertial load:
Definition for our purposes:
The load that is actually rotatd by the actuator. Since the purpose is to rotated the load, and speed adjustment is necessary, allow an extra margin of 10 times or more in the effective torque.
* Actuator effective torque ≥ S x Ti
(S is 10 times or more)

Static load: Ts
Definition for our purposes:
A load that requires pressing force only, as represented by the clamp.
(If the mass of the clamp itself in the drawing below is considered in the calculations, it should be regarded as an inertial load.)

Resistance load: Tr
Definition for our purposes:
A load that is affected by external forces such as friction or gravity. Since the purpose is to move the load, and speed adjustment is necessary, allow an extra margin of 3 to 5 times in the effective torque.
* Actuator effective torque ≥ (3 to 5) x Tr
(If the mass of the clamp itself in the drawing below is considered in the calculations, it should be regarded as an inertial load.)

Accelerating torque calculation

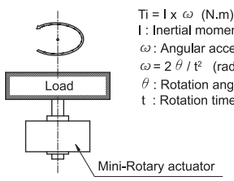

Ti = I x ω (N.m)
I : Inertial moment
ω : Angular acceleration
ω = 2 θ / t² (rad/s²)
θ : Rotation angle (rad)
t : Rotation time (s)

(Example)

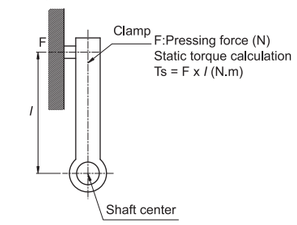

F:Pressing force (N)
Static torque calculation
Ts = F x l (N.m)

(Example)

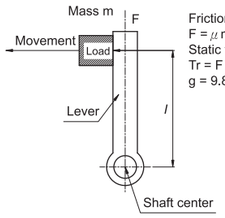

Friction coefficient μ
F = μ mg
Static torque calculation
Tr = F x l(N.m)
g = 9.8m/s²

Model Selection

Selection Procedure	Formulas	Selection Example

1. Operating conditions

List all possible operating conditions according to the mounting position

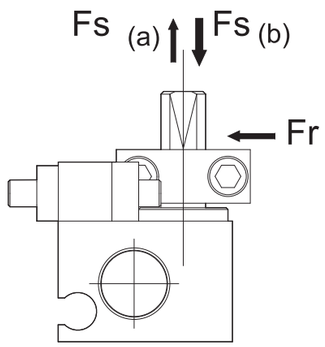

- Model used
- Operating pressure
- Mounting position
- Load type
  Ts (N.m)
  Tr (N.m)
  Ti (N.m)
- Load configuration
- Rotation time t (s)
- Rotation angle
- Load mass m (kg)
- Distance between central axis and center of gravity H (mm)

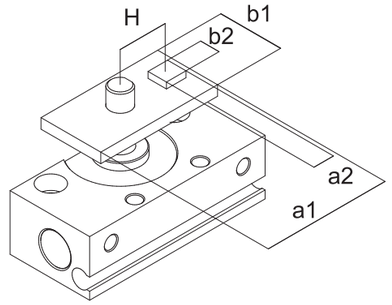

Rotary Model: MRC-8-90
Pressure: 0.4MPa
Mounting orientaion: Vertical
Type of load: Inertial load Ti
Load 1 configuration: 25mmx12mm (rectangular plate)
Load 2 configuration: 7mmx7mm (square plate)
Rotation time t: 0.2s **Rotation angle:** 90°
Load 1 mass m1: 0.05kg **Load 2 mass m2:** 0.004kg
Distance between central axis and center of gravity H: 9 mm

2. Allowable load

Confirm that the radial load, thrust load and moment are within the allowable ranges.

Effective torque ≧ Ts
Effective torque ≧ (3 to 5)Tr
Effective torque ≧ 10 Ti
Effective torque

Inertial load
10 x Ti =10 x I x ω
=10 x 8.28 x 10^{-6} (2 x (π /2)/0.2^2)
=0.0064N.m < Effective torque OK

3. Inertial moment

Find the load's inertial moment "I" for the energy calculation.

0.1 to 0.5s/90° — 0.2s/90° OK

4. Kinetic energy

Confirm that the load's kinetic energy is within the allowable value.

Thrust load: m x 9.8 ≦ Allowable load
Allowable load

(0.05+0.004) x 9.8= 0.53N < Allowable load OK

5. Rotation time

Confirm that it is within the adjustable range of rotation time.

I_1 = m x (a^2+b^2) / 12
I_2 = m x (a^2+b^2) / 12+ m x H^2
I = I_1+I_2
Inertial moment

I_1 = 0.054 x (0.025^2 + 0.012^2) / 12 =3.46x10^{-6} kg.m^2
I_2 = 0.054x(0.007^2+0.007^2)/12+0.054x0.009^2
= 4.82x10^6kgm^2
I = 3.46x10^{-6}+ 4.82x10^{-6}
=8.28x10^{-6} kgm^2

6. Required torque

Confirm the type of load as shown below, and select an actuator that satisfies the required torque.
- Static load: Ts
- Resistance load: Tr Load types
- Inertial load: Ti

1/2 x I x $ω^2$ ≦ Allowable energy
ω = 2 θ /t (ω : Terminal angular velocity)
θ : Rotation angle (rad)
t : Rotation time (s)
Allowable kinetic energy/Rotation time

12 x 8.28 x 10^{-6} (2 x (π /2)/0.2^2)
=0.00032J = 0.19mJ < Allowable energy OK

Rotation Angle and Rotating Direction

For actuators with external stopper, the rotation end can be set within the ranges shown in the drawing by adjusting the stopper bolt.
The shaft turns clockwise when the A port is pressurized, and counterclockwise when the B port is pressurized.

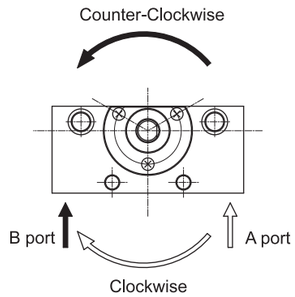

With external stopper

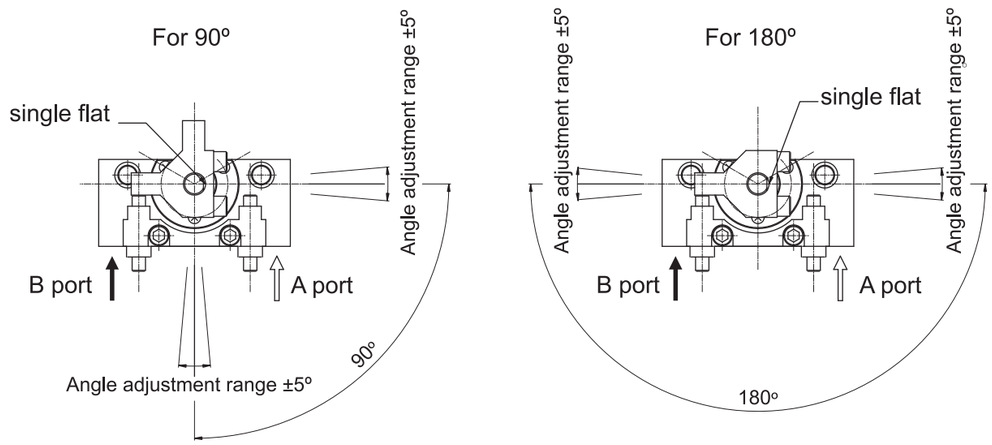

Note) The drawings show the rotation range for the shaft's single flat.
The single flat position in the drawings shows the counterclockwise rotation end when the rotation angle is adjusted to 90∞ and 180∞.

Construction

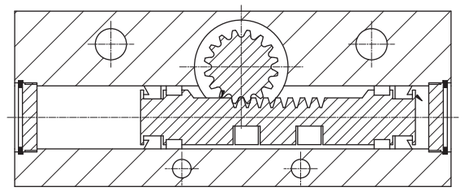

External Stopper Assembly Procedure

*Actuators with external stopper come already assembled; therefore, the following procedure is not required.

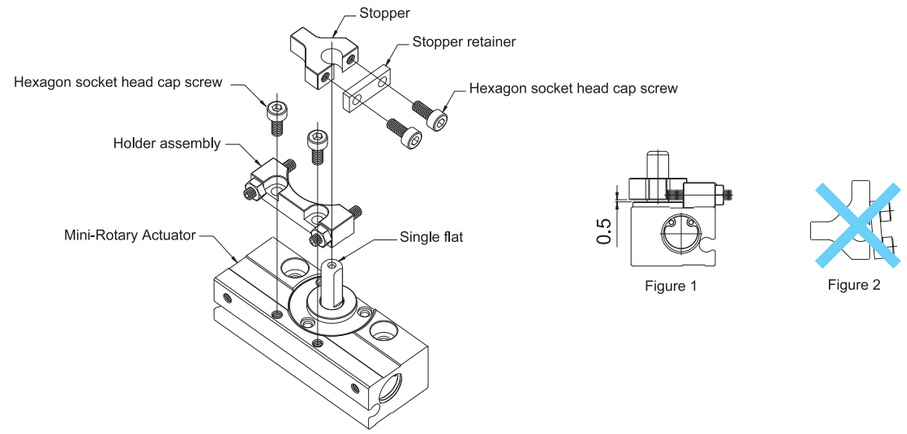

<1> Assemble the stopper retainer to the stopper temporarily. Then place the stopper retainer in the single flat position and tighten with hexagon socket head cap screws.
Leave a space of approximately 0.5mm between the stopper and the Mini-Rotary Actuator, as shown in Figure1.
Tighten the hexagon socket head cap screws evenly so that the stopper retainer is not unevenly tightened as in Figure 2.
Furthermore, take precautions to avoid applying excessive force to the shaft when tightening.
<2>Tighten the holder assembly with hexagon socket head cap screws.

	Tightening torque N.m
Hexagon socket head cap screws	0.8 to 1.2

Auto Switch Mounting

If a size 6 actuator with auto switch is being used, keep the magnetic body away at least 2mm or more from the bottom of the actuator.
If the magnetic body comes closer than 2mm, malfunction of the auto switch may occur due to the magnetic force drop.
*When using the bottom face for mounting, a non-magnetic spacer (such as aluminum) is required as shown below.

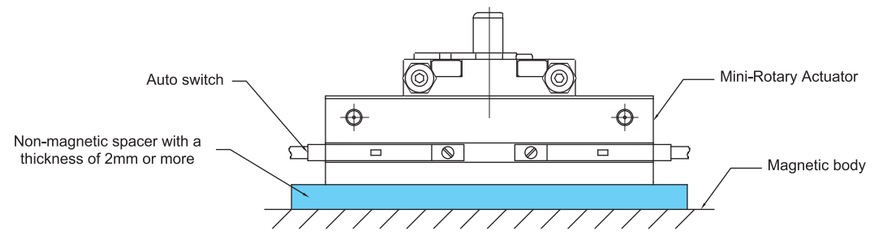

Rotation Angle Adjustment

As a standard feature, the actuator with external stopper is equipped with a rotation angle adjustment screw that can be used to adjust the angle of rotation.

Size	Angle adjustment per single rotation of angle adjustment screw
MRC-6 **MRC-8**	2.3º

The rotation adjustment range for the actuator with extemal stop-per is ±5º at each rotation end.
Please note that adjusting beyond this range, may cause product malfunction.